TRANSVARO

Optics • Laser • Advanced Defense Systems

Product Catalogue

Transvaro Elektron Aletleri Sanayi ve Ticaret A.Ş. reserves the right to modify the product without prior notice.

Transvaro Elektron Aletleri Sanayi ve Ticaret A.Ş. is a subsidiary of UYAR HOLDING.

TRANSVARO

Transvaro Elektron Aletleri Sanayi ve Ticaret A.Ş. is a subsidiary of UYAR HOLDING.

www.transvaro.com - info@transvaro.com

OVERVIEW

This catalogue presents Transvaro's advanced electro-optic, laser and defense technologies developed for modern operational environments.

Each system is designed to deliver precision, reliability and superior performance under demanding field conditions. From optical sighting systems to high-technology laser and electromagnetic solutions, our portfolio reflects decades of engineering expertise.

TABLE OF CONTENTS

6. **About Transvaro**

This section provides an overview of Transvaro's history, vision, mission, core expertise and corporate structure within the defense sector.

10. **Quality Standards**

This section highlights our certifications, quality management systems, references, quality policies and product verification and testing capabilities.

18. **Reconnaissance & Surveillance Systems**

This section presents our reconnaissance and surveillance solutions that provide continuous situational awareness, enabling reliable detection, identification and target tracking. Detailed technical datasheets and key features are included on the product pages.

38. **Weapon Mounted Thermal Vision Systems**

This section presents our weapon mounted sighting and scope solutions featuring thermal and fusion vision technologies. Detailed technical datasheets and key features are included on the product pages.

56. **Weapon Mounted Day-Night Vision Systems**

This section presents our weapon mounted sighting and scope solutions featuring day-and night vision technologies. Detailed technical datasheets and key features are included on the product pages.

66. **Helmet Mounted Systems**

This section presents our helmet-mounted solutions, including night vision goggles, strobes and flashers. Detailed technical datasheets and key features are included on the product pages.

74. **Laser Based Targeting & Pointing Systems**

This section presents our laser-based targeting and pointing solutions, including laser rangefinders, laser designators, laser illuminators, zeroing devices and target markers. Detailed technical datasheets and key features are available on the respective product pages.

About Us

Transvaro is one of Türkiye's leading private-sector companies, with over 40 years of experience in the fields of electro-optics and defense technologies. Since its establishment, Transvaro has been developing high-performance imaging, detection, and targeting systems for military and civilian security needs. Today, with its broad product portfolio and strong engineering infrastructure, Transvaro holds a strategic position as one of the key players in the national defense ecosystem.

Our modern manufacturing facilities in Istanbul constitute an integrated technology center where optical, electro-optical, mechanical, and electronic design capabilities are brought together under a single roof. Strategic products such as night vision systems, thermal cameras, multi-band electro-optical solutions, opto-mechanical lens systems, laser-based systems, and control and test stations are developed and manufactured through Transvaro's engineering expertise and its proven field experience.

Transvaro has embraced the principle of domestic production at the highest level; it applies international military standards across all stages, from design to mass production, and from testing processes to integration activities. Today, thousands of our systems actively deployed across diverse regions of the world stand as a testament to the company's reliability, quality, and strategic competence.

With more than four decades of experience, extensive engineering expertise, an innovative approach, and a strong culture of sustainable production, we continue to contribute to the defense industry by developing strategic solutions that enhance the operational effectiveness of our users.

Our Vision

To become a strategically preferred global technology company that develops electro-optical technologies for the defense and security sectors, distinguished among the industry's leading brands through its innovation capability, engineering excellence, and international competitiveness.

Our Mission

To develop high-performance, reliable, and domestic solutions in electro-optics and defense systems; to produce systems that create tangible value in the field by deeply analyzing customer needs; to build engineering capabilities that reduce external dependency in critical technologies; to consistently implement international military standards in R&D, quality, and production processes; to enhance products and processes through a culture of continuous improvement; and to contribute added value to the growth of the defense industry, the advancement of domestic technologies, and the engineering ecosystem.

A Vision Empowered at Every Step

1988
Night Vision Goggle Manufacturing

1992
Establishment of Halkalı Factory Facilities

1994
100% Türkiye Based Company With Domestic Capital and 100% Nationalization Detector Production

1995
Design and Production of the First Laser Target Designator in 3 Different Models

2012
Establishment of Image Intensifier Tube Repair and Assembly Line

2014
Cable Harness Production, 4 Mine Countermeasure Vessels, 2 Frigates, 1 Fast Attack Craft

2015
Design and Production of Thermal Monoculars and Binoculars, Introduction of the Engerek Series

2016
Gimbal Design, Laser Target Designator, and Electromagnetic Weapon Radar Systems

2017
Scope Design and Production, Acoustic Sniper Detection System, Radar Systems

2018
FEDAİ, DROKA Drone Detection, Identification, and Jamming Systems; Initial Designs of Cooled ENGEREK and GUARD Series

2019
Design and Production of Sniper Scope

1996

Production of the First Firing Training Simulator

1997

Production of Electronic Time-Programmable Fuze for 155mm Cargo Ammunition and Development of Test Systems; Development of Night Vision Goggles

1998

Establishment of the Armored Vehicle Training and Simulation Center

2000

Development of Production and Test Systems for Electronic Time-Fuzed Detonators of Eryx Anti-Tank Weapons

2007

Design and Production of Clip-On Thermal Scope

2009

Tactical Night Vision TÜBİTAK Project; Design and Production of 3,500 Thermal Weapon Scopes; Post-Disaster Facility Restoration

2010

New Generation Night Vision Goggles

2020

Pilot Night Vision Goggle Design and Manufacturing

2022

SWIR Imaging Studies; Optical & Laser Sniper Detection Systems Initial Design and Production

2024

Various Weapon-Mounted Electro-Optical Products Project

2025

North Finder and Laser Target Designator Design and Production

Excellence is Our Standard

Certifications

AQAP 2110 Industrial Quality Assurance Certificate

ISO 9001:2015 Quality Management System Certificate

ISO 14001:2015 Environmental Management System Certificate

ISO 45001:2018 Occupational Health and Safety Management System Certificate

ISO 10002:2018 Customer Satisfaction Management System Certificate

National Security Clearance Facility Certificate

NATO Security Clearance Facility Certificate

Establishment and Production Authorization Certificates

CERTIFICATE

TRANSVARO ELEKTRON ALETLERİ SAN. VE TİC. A.Ş.

ISO 9001:2015

Kalite Yönetim Sistemi

Quality Management System

T.C.
MİLLİ SAVUNMA BAKANLIĞI
ENDÜSTRİYEL KALİTE GÜVENCE SEVİYE BELGESİ

ANKARA
NATO 2019

BELGE NO : 2019/18

T.C.
MİLLİ SAVUNMA BAKANLIĞI
ANKARA

(MINISTRY OF NATIONAL DEFENCE OF THE REPUBLIC OF TURKEY)

TESİS GÜVENLİK BELGESİ
(FACILITY SECURITY CLEARANCE CERTIFICATE)

NATO UNCLASSIFIED

THE REPUBLIC OF TURKEY
MINISTRY OF FOREIGN AFFAIRS

FACILITY SECURITY CLEARANCE CERTIFICATE (FSCC)

NATO UNCLASSIFIED

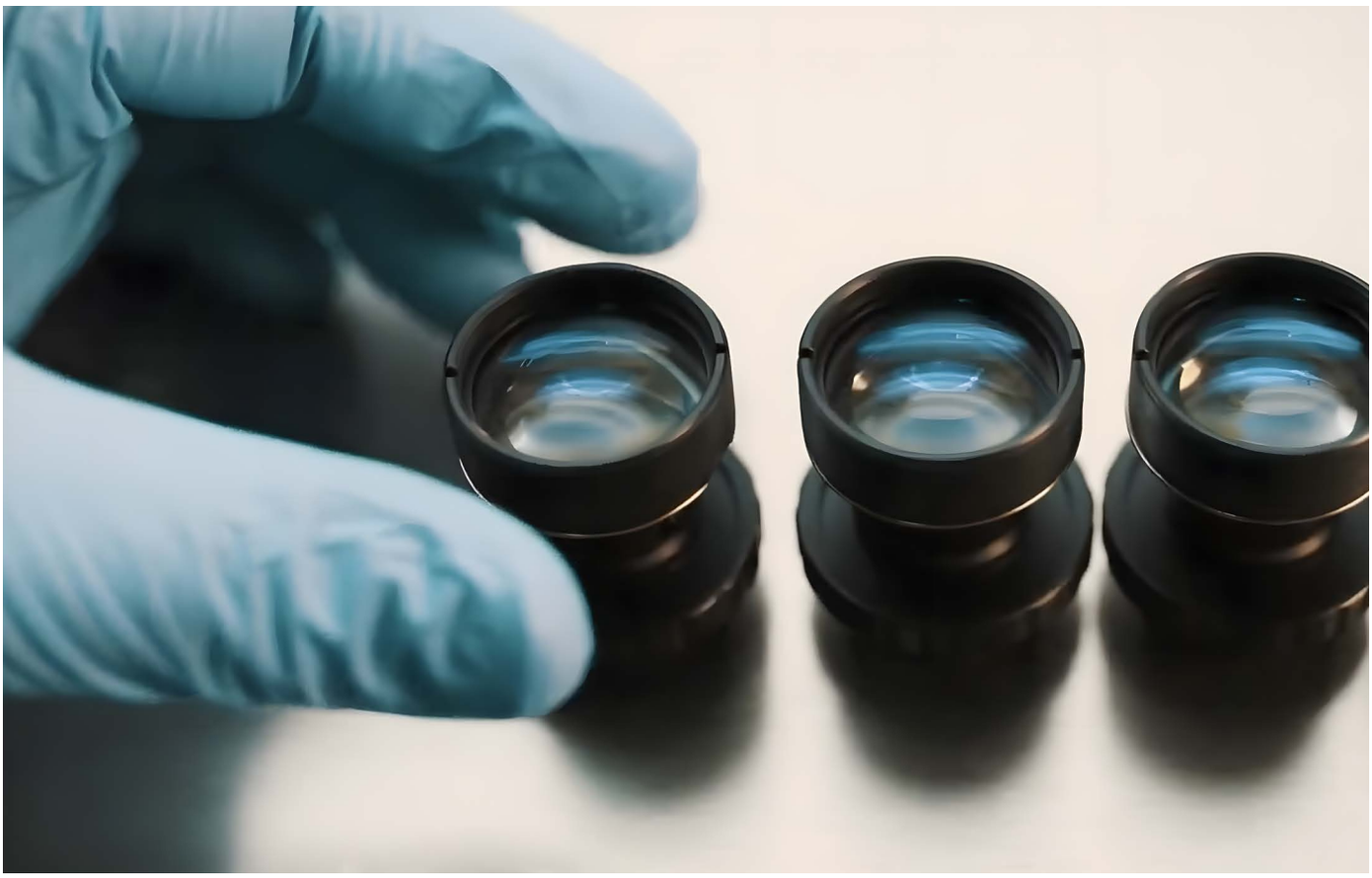

Reliable Production Sustainable Quality

Quality Management System

Transvaro's Quality Management System has been established in accordance with the requirements of ISO 9001:2015 and AQAP-2110 standards and has been audited and certified as compliant with these standards by TURKAK Accreditation and the Quality Management Department of the Ministry of National Defense.

In addition, Transvaro holds ISO 14001:2015, ISO 45001:2018, and ISO 10002:2018 Integrated Management System certifications, as well as Facility Security Clearances classified as "National Secret" and "NATO Secret" issued by the Ministry of National Defense.

Quality Policy

Transvaro Elektron Aletleri Sanayi ve Ticaret A.Ş., our primary objective is to design and manufacture original products that exceed customer expectations and requirements by utilizing advanced technologies.

To achieve this goal, our vision is to enhance the knowledge and skills of our employees through innovative and creative approaches and to provide the necessary technological infrastructure. From the project proposal stage through R&D processes and up to final product delivery, we are committed to ensuring customer expectations and satisfaction while maintaining our corporate structure and long-term sustainability.

Product Verification and Test Capability

Ensuring Reliability Through Advanced Testing and Validation

Ensuring operational reliability and mission readiness requires comprehensive verification and validation processes. The organization maintains advanced testing and evaluation infrastructure designed to assess product performance under extreme environmental and mechanical conditions, in full compliance with **MIL-STD-810G** standards.

As part of integrated testing activities, each system undergoes rigorous evaluation across parameters such as temperature, humidity, dust, sand, vibration, shock, drop, immersion, and pressure. These controlled procedures replicate real operational environments and ensure consistent functionality and durability in the field.

The methodologies employed provide measurable evidence of the product's durability, constituting a strategic component of the General Reliability and Qualification Engineering framework.

This structured approach demonstrates a commitment to delivering mission-capable, field-proven, and standards-compliant defense solutions.

Environmental Test Laboratory

Climatic Test
(Hot-Cold-Humidity Environment)

This test is applied to samples exposed to high temperatures under environmental conditions. It is conducted to measure the reaction of the product or sample to environmental conditions involving high temperatures.

After the test begins, variables are adjusted in accordance with the relevant procedure requirements, depending on the intended area of use of the sample.

Tests are carried out in accordance with customer specifications. During the conducted tests, the performance of the samples is monitored, and the results obtained are strategically utilized to support product development activities.

Dust and Sand Test

The Dust Test is performed in accordance with the MIL-STD-810G test standard. In order to evaluate the effects of dust on the test specimen, dust particles smaller than 150 µm are used. These effects include blockage of openings, penetration into cracks, clogging of filters, and accumulation of dust in cracks, gaps, bearings, and joint connections.

Mechanical Vibration and Shock Test

The developed systems are subjected to comprehensive mechanical vibration and shock testing in order to ensure reliability under challenging environmental and operational conditions.

Through this rigorous process, the durability, continuity, and strategic operational reliability of system performance are assured.

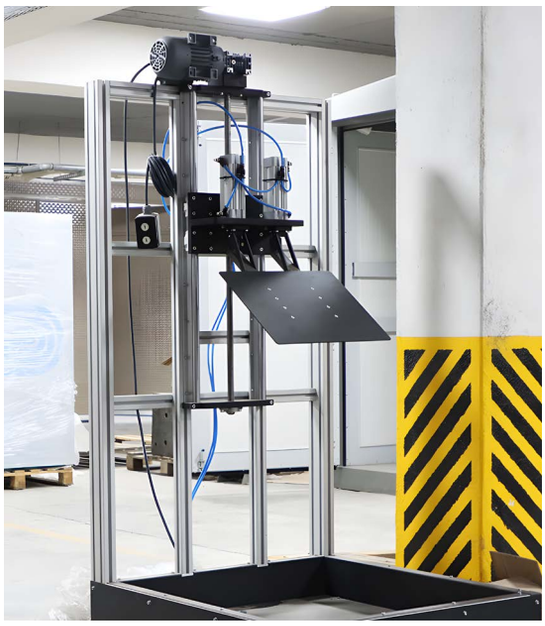

Impact and Drop Test

Systems are subjected to drop tests in accordance with relevant standards to ensure that they maintain structural integrity under potential impact and drop conditions.

Water Resistance Test

Systems are subjected to immersion (water submersion) tests in accordance with relevant standards to ensure functionality and sealing performance are maintained when exposed to water.

These tests verify compliance with environmental durability and reliability requirements.

High Pressure Test

The systems are subjected to comprehensive pressure tests to ensure that they maintain structural integrity and sealing performance under high-pressure conditions. These tests ensure the continuity of reliability and durability standards.

RECONNAISSANCE & SURVEILLANCE SYSTEMS

Reconnaissance and Surveillance Systems are designed to provide continuous situational awareness and intelligence gathering in complex and challenging operational environments.

These systems enable the detection, identification, and tracking of targets with high accuracy, delivering timely and reliable data to decision-makers.

Our solutions, developed to operate under harsh environmental and operational conditions, combine advanced sensing technologies, robust system architectures, and user-centered design to ensure mission effectiveness, operational reliability, and long-term performance.

PRODUCTS

20. GUARD
(Day-Night Optical Surveillance System)

21. ENGEREK-9
(Handheld Day-Night Optical Surveillance System)

22. ENGEREK-C
(Handheld Thermal Binocular Surveillance System)

23. ENGEREK-F
(Handheld Fusion Binocular Surveillance System)

24. BARREL EYE
(Handheld Thermal Monocular)

25. DELİL
(Laser Target Designator)

26. G-18 GIMBAL
(Electro-Optical Surveillance System)

27. G-28 GIMBAL
(Electro-Optical Surveillance System)

28. OSD-3000
(Long-Range Optic & Laser Sniper Detection System)

29. MANUS SERIES
(Optic & Laser Sniper Detection System)

30. SD-500
(Acoustic Sniper Detection System)

31. KUZBUL
(North Finder)

32. 15-45x60
(Tactical Daytime Spotting Scope)

33. BIN-8x32
(Tactical Daytime Handheld Binocular)

34. BIN-10x50
(Tactical Daytime Handheld Binocular)

35. BIN-20x80
(Tactical Daytime Observation Binocular)

36. BIN-20x120
(Tactical Daytime Observation Binocular)

GUARD

DAY & NIGHT OPTICAL SURVEILLANCE SYSTEM

GENERAL FEATURES

GUARD is a high-performance, multi-sensor electro-optical surveillance and targeting system developed for fixed platforms. Thanks to its automatic target detection and moving target tracking capabilities, it ensures continuous and precise monitoring; it is highly suitable for long-duration, wide-area surveillance and threat assessment missions.

The system integrates advanced sensors such as cooled MWIR thermal camera, SWIR camera, low-light day camera, laser rangefinder and pointer, GPS, and an electronic compass. Supported by AI-based target recognition, classification, and anomaly detection, GUARD provides accurate coordinate data and enhanced situational awareness, offering an effective solution for the protection of critical infrastructure, military bases, and border areas.

SPEC SUMMARY

	THERMAL *(Cooled)*	DAY CAMERA *(Low Light)*	SWIR
Usage	Pan-Tilt		
Spectral Band	3–5µm	0.4-1.1µm	0.9–1.7µm
Field of View	Narrow: 1.2° x 1° Wide: 21.7° x 17.5°	Narrow: 1.9° x 1° Wide: 62° x 37.4°	Narrow: 5.5° x 4.4° Wide: 27° x 21°
Optical Magnification	18X Continuous	37X Continuous	5X Continuous

Detection	12km
Recognition	3km
Detection	26km
Recognition	6.5km

AI BASED TARGET CLASSIFICATION

WEIGHT **<20kg**

REMOTE CONTROL

**These calculations have been performed according to the Johnson criteria. Actual performance may vary depending on atmospheric conditions, temperature, humidity, fog, precipitation and other environmental factors.*
**A tolerance of ±10% applies to all parameters.*

ENGEREK-9

HANDHELD DAY & NIGHT OPTICAL SURVEILLANCE SYSTEM

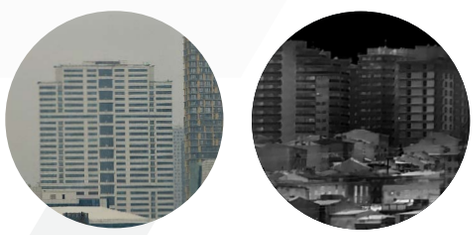

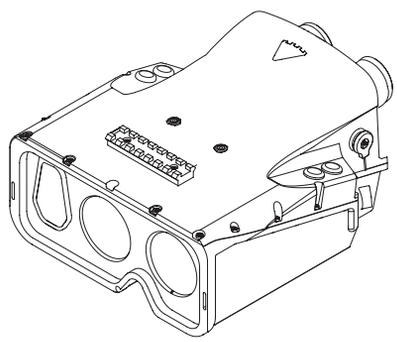

GENERAL FEATURES

ENGEREK-9 is a compact, rugged, and portable cooled handheld thermal imaging system that combines long-range imaging, target detection, and precise positioning capabilities. Equipped with a cooled MWIR thermal camera and a low-light day camera, the system delivers clear imagery for both day and night operations, even under harsh environmental conditions.

In addition to advanced features such as image stabilization and automatic optimization, its integrated laser rangefinder and coordinate calculation capability make ENGEREK-9 an effective solution for reconnaissance, surveillance, and special operations missions.

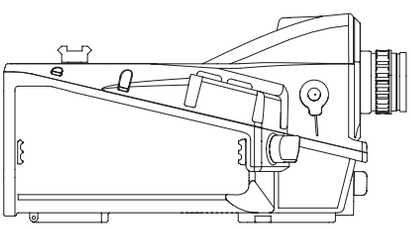

SPEC SUMMARY

	THERMAL *(Cooled)*	DAY CAMERA *(Low Light)*
Usage	Handheld / Pan-Tilt	
Spectral Band	3–5µm	0.4-1.1µm
Field of View	Narrow: 2° x 1.6° Wide: 29.9° x 24.1°	Narrow: 2.3° Wide: 61°
Optical Magnification	Continuous 15X	Continuous 30X

Detection	**9.5km**
Recognition	**3.3km**
Detection	**15km**
Recognition	**7km**

OPERATING TIME	WEIGHT	DIMENSIONS (mm)
≥5h	**<3kg**	**265 x 215 x 135**

**These calculations have been performed according to the Johnson criteria. Actual performance may vary depending on atmospheric conditions, temperature, humidity, fog, precipitation and other environmental factors.*
**A tolerance of ±10% applies to all parameters.*

ENGEREK-C

HANDHELD THERMAL BINOCULAR SURVEILLANCE SYSTEM

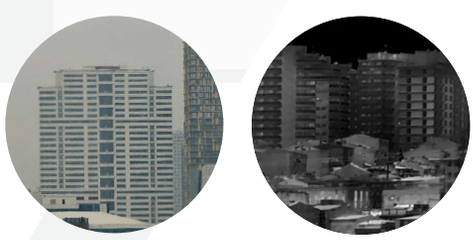

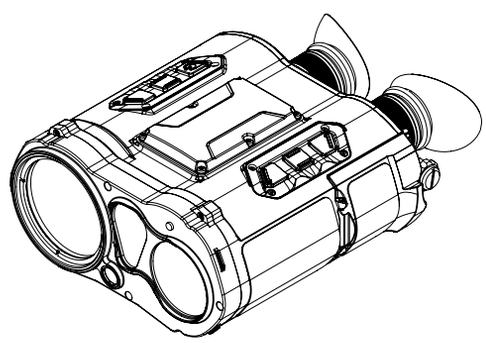

GENERAL FEATURES

ENGEREK-C is a multi-sensor surveillance system equipped with an uncooled thermal camera, visible band camera, GPS, digital compass, and an eye-safe laser range finder. The system combines distance, position, and orientation data to support long-range target detection and positioning, and enables photo and video recording for surveillance, reconnaissance, and mission documentation purposes.

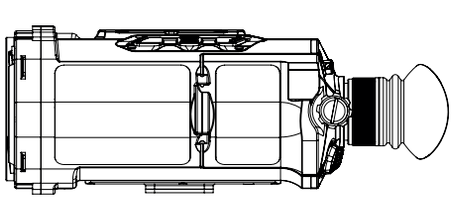

SPEC SUMMARY

	THERMAL	DAY CAMERA *(Low Light)*
Usage	Handheld / Tripod	
Detector Type	Uncooled µB	CMOS
Spectral Band	8–14µm	0.4-1.1µm
Field of View	6.3° x 5°	Narrow: 2.2° x 1.2° Wide: 61.2° x 36.8°
Optical Magnification	Fixed 4.2X	Continuous 30X

Detection	**3300m**
Recognition	**1100m**
Detection	**6500m**
Recognition	**2100m**

OPERATING TIME
≥8h

WEIGHT
<1.8kg

DIMENSIONS (mm)
206x200x86

**These calculations have been performed according to the Johnson criteria. Actual performance may vary depending on atmospheric conditions, temperature, humidity, fog, precipitation and other environmental factors.*
**A tolerance of ±10% applies to all parameters.*

ENGEREK-F

HANDHELD FUSION BINOCULAR SURVEILLANCE SYSTEM

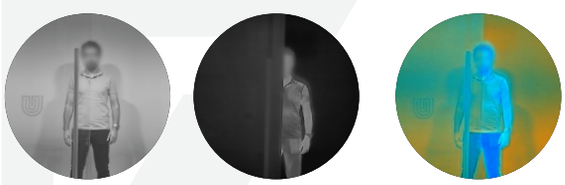

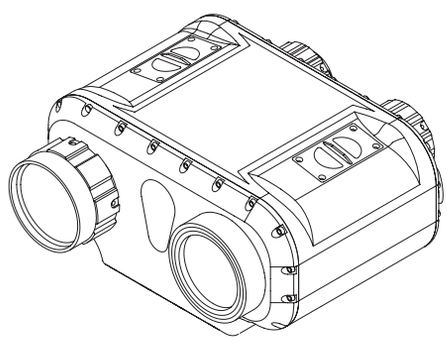

GENERAL FEATURES

ENGEREK-F is a handheld fusion binocular surveillance system equipped with a thermal camera, a low-light day camera, a laser rangefinder, and a digital magnetic compass. Designed for uninterrupted operation in both day and night conditions, the system provides clear imaging in starlight environments and supports digital video output for recording and transmission to external displays.

The system's core capability is the seamless fusion of low-light and thermal technologies; this enables enhanced image clarity, superior target discrimination, and improved situational awareness, delivering high operational effectiveness in critical applications.

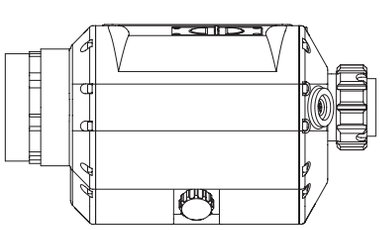

SPEC SUMMARY

	THERMAL	DAY CAMERA *(Low Light)*
Usage	Handheld / Tripod	
Detector Type	Uncooled µB	CMOS
Spectral Band	8–14µm	0.4-1.1µm
Field of View	9.8° x 7.8°	
Digital Magnification	2X-4X-8X	
Imaging Modes	Low Light / Thermal / Fusion / Color Fusion	

Detection	**2100m**
Recognition	**720m**
Detection	**4300m**
Recognition	**1430m**

OPERATING TIME	WEIGHT	DIMENSIONS (mm)
≥8h	**<1.6kg**	**215 x 200 x 95**

**These calculations have been performed according to the Johnson criteria. Actual performance may vary depending on atmospheric conditions, temperature, humidity, fog, precipitation and other environmental factors.*
**A tolerance of ±10% applies to all parameters.*

BARREL EYE

HANDHELD THERMAL MONOCULAR

Thermal Imaging with Multiple Color Palettes

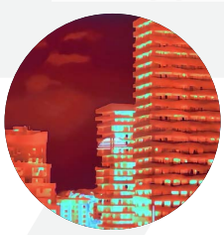

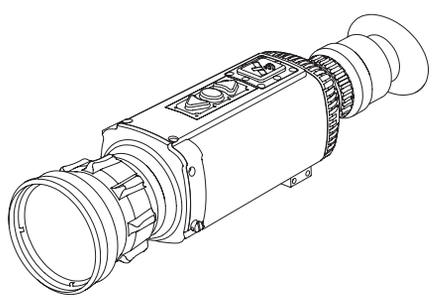

GENERAL FEATURES

Barrel Eye is a versatile uncooled thermal surveillance camera thatcan be used or mounted on a tripod. Its compact and lightweight design provides easy portability, quick setup, and immediate deployment in the field.

With advanced digital image processing delivering clear thermal imagery, Barrel Eye offers reliable performance under harsh conditions with its long battery life and environmental durability. It is an ideal solution for covert, low-visibility surveillance missions that require silent and discreet operation.

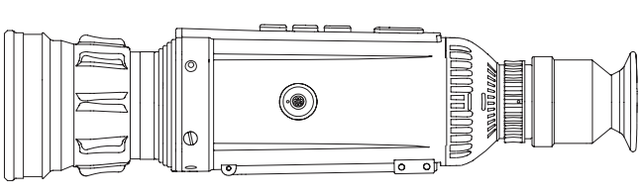

SPEC SUMMARY

Usage	Handheld / Tripod
Detector Type	Uncooled µB
Spectral Band	8–14µm
Detector Resolution	640×512
Field of View	7.9° x 6.3°
Optical Magnification	3.4X
Digital Magnification	2X-4X-8X

Detection	**1600m**
Recognition	**880m**
Detection	**5300m**
Recognition	**1750m**

OPERATING TIME
6 / 12h

WEIGHT
<650g

DIMENSIONS (mm)
260 x 80 x 80

**These calculations have been performed according to the Johnson criteria. Actual performance may vary depending on atmospheric conditions, temperature, humidity, fog, precipitation and other environmental factors.*
**A tolerance of ±10% applies to all parameters.*

DELİL

LASER TARGET DESIGNATOR

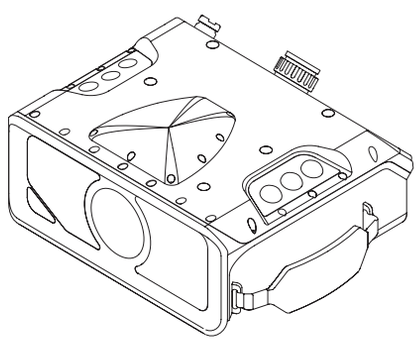

GENERAL FEATURES

The Advanced Surveillance and Laser Target Designation System is a compact and portable solution designed for precise target detection and designation in military operations. With 70mJ pulse energy, a 15ns pulse duration, and beam divergence below 0.4mrad, it enables high-precision target designation at long ranges. STANAG 3733 compliance and remote control capability ensure reliable use in accordance with NATO standards.

The system provides clear imaging under suitable environmental conditions through a cooled thermal camera and 10X direct viewing capability. A laser rangefinder with a measurement range of 200m–12km, a digital magnetic compass, and an optional SWIR module provide highly accurate target detection and orientation capabilities.

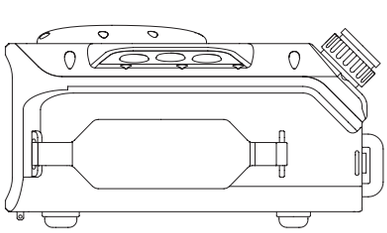

SPEC SUMMARY

Laser Parameters	70mJ, 15ns, <0.4mrad
Target Designation Range	8km ~ 10km
Optical Magnification	10X Direct View, 15X Thermal
Battery Type	2×3S Block Batteries
Communication Interface	RS422 / Ethernet / Wi-Fi
SWIR Imager	Add-On Optional
North Finder	Add-On Optional

Detection	**9.5km**
Recognition	**3.3km**
Detection	**15km**
Recognition	**7km**

MOUNTABLE
NORTH FINDER

WEIGHT
<4.5kg

DIMENSIONS (mm)
246 x 229 x 118

**These calculations have been performed according to the Johnson criteria. Actual performance may vary depending on atmospheric conditions, temperature, humidity, fog, precipitation and other environmental factors.*
**A tolerance of ±10% applies to all parameters.*

G-18 GIMBAL

ELECTRO-OPTICAL (E/O) SURVEILLANCE SYSTEM

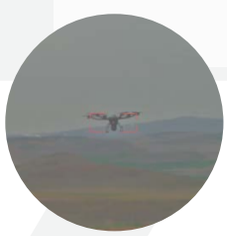

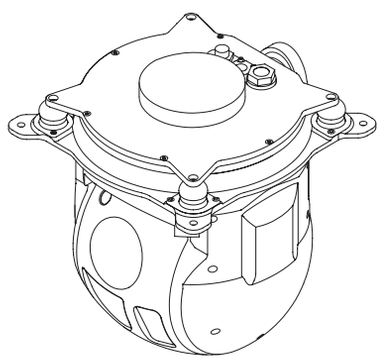

GENERAL FEATURES

G-18 Gimbal integrates a cooled thermal camera, a low-light day camera, and a laser rangefinder into a compact, high-precision system designed for tactical UAV platforms.

G-18 GIMBAL enables accurate target detection, identification, ranging, and tracking under all lighting and environmental conditions by providing continuous stabilization and precise line-of-sight control. Its lightweight and rugged design ensures reliable performance during dynamic flight operations, making it an ideal solution for intelligence, surveillance, reconnaissance, and target designation missions.

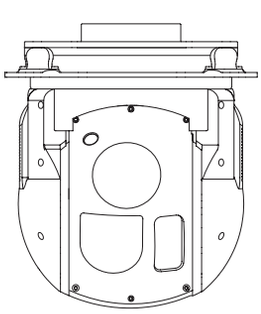

SPEC SUMMARY

	THERMAL	DAY CAMERA *(Low Light)*
Usage	Tactical UAV	
Detector Type	Cooled	CMOS
Spectral Band	3–5µm	0.4-1.1µm
Field of View	Narrow: 2° Wide: 29°	Narrow: 1.3° Wide: 40°
Control	Operator Control Unit	
Digital Magnification	2X-4X-8X	

Detection	**6000m**
Recognition	**2000m**
Detection	**13km**
Recognition	**4000m**

DIGITAL MAGNIFICATION
2X - 4X - 8X

WEIGHT
<4.3kg

DIMENSIONS (mm)
ø180 x 250

**These calculations have been performed according to the Johnson criteria. Actual performance may vary depending on atmospheric conditions, temperature, humidity, fog, precipitation and other environmental factors.*
**A tolerance of ±10% applies to all parameters.*

G-28 GIMBAL

ELECTRO-OPTICAL (E/O) SURVEILLANCE SYSTEM

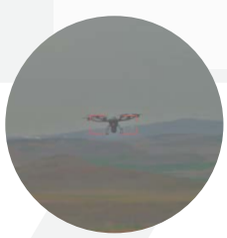

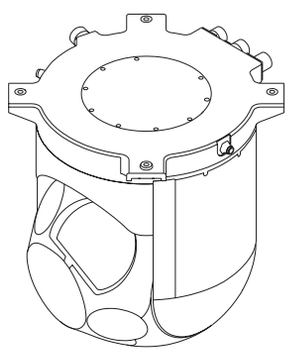

GENERAL FEATURES

G-28 GIMBAL is a high-performance, multi-sensor payload solution that integrates a cooled thermal camera, a low-light day camera, a precision laser rangefinder, and a laser designator into a single compact system.

Developed for UAV and helicopter platforms, the G-28 GIMBAL provides precise target detection, identification, ranging and designation capabilities under all operational conditions through superior line-of-sight stabilization. Its rugged and lightweight architecture ensures reliable performance in highly dynamic flight environments, making it an ideal solution for demanding intelligence, surveillance, reconnaissance, and targeting missions.

ADDITIONAL SOFTWARE AND OPTIONS	
Laser Target Designator	OPTIONAL
MTT *(Multiple Target Tracking)*	OPTIONAL
MTI *(Multiple Target Identification)*	OPTIONAL
GEO-LOC / GEO-TRACK	OPTIONAL
Image Optimisation	OPTIONAL
Embedded Photo / Video Record	OPTIONAL

SPEC SUMMARY

	THERMAL	**DAY CAMERA** *(Low Light)*
Usage	UAV / Helicopters	
Detector Type	Cooled	CMOS
Spectral Band	3–5µm	0.4-1.1µm
Field of View	Narrow: 1.8° Wide: 15°	Narrow: 1.4° Wide: 15°
Control	Operator Control Unit	
Digital Magnification	2X-4X-8X	

Detection	**8000m**
Recognition	**3200m**
Detection	**15km**
Recognition	**6500m**

DIGITAL MAGNIFICATION
2X - 4X - 8X

WEIGHT
<20kg

DIMENSIONS (mm)
ø280x365

**These calculations have been performed according to the Johnson criteria. Actual performance may vary depending on atmospheric conditions, temperature, humidity, fog, precipitation and other environmental factors.*
**A tolerance of ±10% applies to all parameters.*

OSD 3000 SERIES

LONG-RANGE OPTICAL & LASER SNIPER DETECTION SYSTEM

GENERAL FEATURES

The OSD3000 Series provides unattended 24/7 protection against long-range optical sniper and laser threats. The high-speed internal laser scanner expands the fixed Field of View to 20° (H) × 15° (V); the motorized steering unit-controlled automatic scanning provides programmable coverage of up to 360° (H) × 60° (V). Thanks to its network-compatible architecture, multiple systems can be managed from a single control station without range limitations.

Acoustic Sniper System (Optional Configuration):

The optional module detects high-intensity sounds such as gunshots and automatically directs the system toward the potential threat, enabling precise localization through the optical detection unit.

OPTIONAL FEATURES

Green Laser
Acoustic Sniper Detection
Wireless Remote Control (50m)
Fiber Remote Control (1km)
Remote Control Unit (25m)
Detection Unit

BOX CONTENT

OSD 3000 Unit
Pantilt
Tripod
Fast Battery Charger
Spare Battery Pack

OSD3000 Series – Threat Detection Capability Matrix

	3000-EM	3000-EL	3000-E	3000-L	3000
Sniper Scopes	✓	✓	✓	✓	✓
SWIR cameras	✓	✓	✓	✓	✓
Night Vision	✓	✓	✓	✓	✓
Laser Pointer	✓	✓	✓		
Laser Range Finder	✓	✓	✓		

Actual performance may vary depending on atmospheric conditions, temperature, humidity, fog, precipitation, and other environmental factors. A tolerance of ±10% applies to all parameters.

MANUS SERIES

OPTIC & LASER SNIPER DETECTION SYSTEMS

GENERAL FEATURES

The MANUS Optical Sniper Detection System is a surveillance system designed to detect concealed sniper optics in the field, as well as laser threats such as laser rangefinders, laser pointers, and designators. The system is used on a lightweight and portable tripod to enhance operational performance.

The device is also capable of operating as a surveillance system through its low-light sensor featuring 10X optical magnification. Its integrated laser rangefinder, GPS, inclinometer, and digital magnetic compass sensors facilitate the measurement of target distance and target coordinates.

OPTIONAL FEATURES

Green Laser
Remote Control Unit (25m)
Pan-Tilt

BOX CONTENT

MANUS Unit
Tripod
Fast Battery Charger
Spare Battery Pack

MANUS Series – Threat Detection Capability Matrix

	Model 1	Model 2	Model 3	Model 4
	MANUS	**MANUS-L**	**MANUS-E**	**MANUS-EL**
Sniper Scopes	✓	✓	✓	✓
SWIR Cameras	✓	✓	✓	✓
Night Vision	✓	✓	✓	✓
Laser Pointer			✓	✓
Laser Range Finder			✓	✓

Actual performance may vary depending on atmospheric conditions, temperature, humidity, fog, precipitation, and other environmental factors. A tolerance of ±10% applies to all parameters.

SD-500

ACOUSTIC SNIPER DETECTION SYSTEM

Mini Display Control Panel

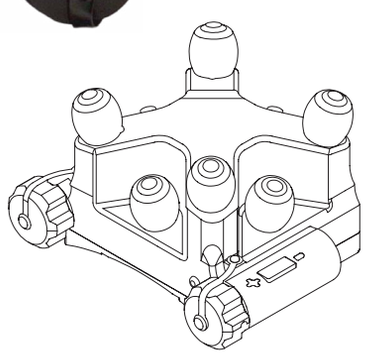

GENERAL FEATURES

SD-500 Acoustic Detection System determines the location of gunfire from ballistic weapons by providing distance and directional information. Designed for shoulder-mounted use, the system displays the direction and range of the detected shot to the user via a mini screen and can also deliver audible alerts through a headset. System settings can be quickly and easily configured via the control panel on the mini display.

SPEC SUMMARY

Maximum Shooting Detection Range	500m
Shot Detection	>%85 *(Supersonic Shots)*
Maximum Distance Measurement Error	±%20
Maximum Angular Measurement Error	±8°

OPERATING TIME
≥6h

WEIGHT
<350g

DIMENSIONS (mm)
144x115x90

Actual performance may vary depending on atmospheric conditions, temperature, humidity, fog, precipitation, and other environmental factors. A tolerance of ±10% applies to all parameters.

KUZBUL

NORTH FINDER

GENERAL FEATURES

The KuzBul True North Finder determines true north within just three minutes using fiber optic gyroscope technology. Following true north alignment, the device maintains the provision of calculated directional data to the selected payload with consistent accuracy across multiple orientations through its high-precision horizontal and vertical axis encoders.

Provided that the device remains powered on and its position is unchanged, the three-minute north-finding procedure does not need to be repeated. KuzBul automatically detects any recalibration requirement and informs the user accordingly.

- It is not dependent on GNSS and determines true north with high accuracy in environments where magnetic compasses are insufficient or unreliable.
- It can be used with different payloads and supports both wired and wireless data transmission.
- Precise manual orientation controls.
- Low power consumption.

SPEC SUMMARY

North Finding Accuracy	≤1 mil RMS
North Finding Time	<3 mins
Interface Options	RS485 / RS422 / CAN 2.0 / BLE 5.0 / IEEE 802.11 b/g/n
Operating Time	36h / 36 North Finding Operations
Battery Type	2×20Wh Battery Pack
External Power Supply	9–24V DC
Integrated OLED Display	160×128 pixels

NORTH FINDING
<3min

WEIGHT
<3.5kg

DIMENSIONS (mm)
Ø180 x 270

Actual performance may vary depending on atmospheric conditions, temperature, humidity, fog, precipitation, and other environmental factors. A tolerance of ±10% applies to all parameters.

15-45x60

TACTICAL DAYTIME SPOTTING SCOPE

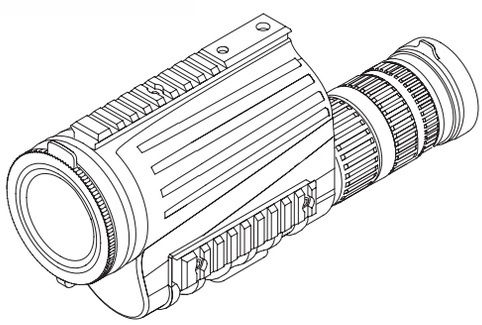

GENERAL FEATURES

The 15–45×60 Spotting Scope is designed to deliver high image clarity, color accuracy, and superior light transmission for short and medium range surveillance and target observation missions. Its ED optical glass construction and multi-coated lenses ensure high-resolution, high-contrast imaging under varying environmental and lighting conditions.

With a 15–45X magnification range and a 60mm objective lens, it enables precise and comfortable observation of targets at both close and long distances. Its waterproof and shock-resistant housing provides reliable use in harsh field and operational environments. Featuring optional Mil-Dot reticle integration, a dual-stage precision focusing mechanism, sunshade, and tripod compatibility, the system constitutes an operationally ready solution designed to meet diverse mission requirements.

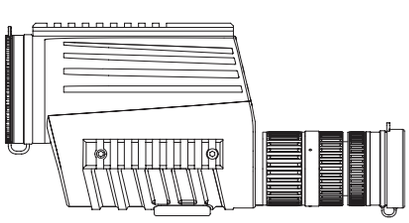

SPEC SUMMARY

Usage	Handheld / Tripod
Objective Lens Diameter	60mm
Optical Magnification	15-45X
Spectral Band	486nm to 650nm
Field of View *(1000m)*	15m / 45m *(Min. / Max.)*
Field of View *(Degree)*	0.85° / 2.58° *(Min. / Max.)*
Eye Relief	30mm
Reticle	Mil-Dot

MAGNIFICATION
15X - 45X

WEIGHT
<1.2kg

DIMENSIONS (mm)
290 x 145 x 85

Actual performance may vary depending on atmospheric conditions, temperature, humidity, fog, precipitation, and other environmental factors. A tolerance of ±10% applies to all parameters.

BIN-8x32

TACTICAL DAYTIME HANDHELD BINOCULAR

GENERAL FEATURES

BIN-8×32 is a military-grade binocular that offers clear imagery, a wide field of view, and high durability with its compact design. With 8X magnification and 32mm objective lenses, it delivers balanced performance for both stationary surveillance and moving target tracking.

It features multi-coated optics that provide natural color accuracy and high contrast, along with a BAK-4 prism system that ensures edge-to-edge sharpness. Manufactured in accordance with MIL-STD standards, the BIN-8×32 is resistant to shock, dust, water, and fog. Its ergonomic, non-slip housing makes it an ideal solution for patrol, reconnaissance, border security, and general military use.

SPEC SUMMARY

Usage	Handheld
Objective Lens Diameter	30mm
Optical Magnification	8X
Field of View	6.8°
Eye Relief	18mm
Prism Type	Roof Prism
Diopter Adjustment	+4D ~ -4D

MAGNIFICATION
8X

WEIGHT
<600g

DIMENSIONS (mm)
145 x 210 x 65

Actual performance may vary depending on atmospheric conditions, temperature, humidity, fog, precipitation, and other environmental factors. A tolerance of ±10% applies to all parameters.

BIN-10x50

TACTICAL DAYTIME HANDHELD BINOCULAR

GENERAL FEATURES

BIN-10×50 is a military-grade binocular designed specifically for outdoor use, delivering clear images, a wide field of view, and high durability. Featuring 10× magnification and 50mm objective lenses, it provides detailed long-range observation, making it ideal for both stationary surveillance and tracking moving targets.

Equipped with multi-coated optics for natural color reproduction and high contrast, the BIN-10×50 offers excellent image quality in a wide range of environments. Its waterproof construction and durable natural rubber armor provide superior protection against impacts and harsh environmental conditions. The optical system is nitrogen-purged to prevent internal fogging, ensuring reliable performance under varying weather conditions. With its ergonomic, non-slip body design, the BIN-10×50 is an ideal solution for patrol, reconnaissance, border security, and general military applications.

SPEC SUMMARY

Usage	Handheld
Objective Lens Diameter	50mm
Optical Magnification	10X
Field of View	6.5°
Eye Relief	20mm
Prism Type	Porro Prism
Diopter Adjustment	+5D ~ -5D

MAGNIFICATION
10X

WEIGHT
<1150g

DIMENSIONS (mm)
185 x 202 x 66

Actual performance may vary depending on atmospheric conditions, temperature, humidity, fog, precipitation, and other environmental factors. A tolerance of ±10% applies to all parameters.

BIN-20x80

TACTICAL DAYTIME OBSERVATION BINOCULAR

GENERAL FEATURES

BIN-20×80 is a military-grade binocular designed specifically for outdoor use, delivering clear images, a wide field of view, and exceptional durability. Featuring 20× magnification and 80mm objective lenses, it enables highly detailed long-range observation, making it ideal for both stationary surveillance and tracking moving targets.

Equipped with multi-coated optics for natural color reproduction and high contrast, the BIN-20×80 provides excellent image quality in demanding environments. Its waterproof construction and durable natural rubber armor offer superior protection against impacts and harsh environmental conditions. Like all models in the series, the optical system is nitrogen-purged to prevent internal fogging while also protecting against contamination caused by fungal growth. With its ergonomic, non-slip body design, the BIN-20×80 is an ideal solution for long-range reconnaissance, surveillance, border security, and general military applications.

SPEC SUMMARY

Usage	Handheld / Tripod
Objective Lens Diameter	80mm
Optical Magnification	20X
Field of View	3.3°
Eye Relief	18mm
Prism Type	Porro Prism
Diopter Adjustment	+6D ~ -6D

MAGNIFICATION
20X

WEIGHT
<2000g

DIMENSIONS (mm)
305 x 235 x 99

Actual performance may vary depending on atmospheric conditions, temperature, humidity, fog, precipitation, and other environmental factors. A tolerance of ±10% applies to all parameters.

BIN-20x120

TACTICAL DAYTIME OBSERVATION BINOCULAR

GENERAL FEATURES

BIN-20×120 is a military-grade field binocular developed for long-range observation, delivering clear images, a wide field of view, and exceptional durability. Featuring 20× magnification and 120mm objective lenses, it provides highly detailed observation at extended distances, making it ideal for both stationary surveillance and tracking moving targets.

Equipped with multi-coated optics for natural color reproduction and high contrast, the BIN-20×120 features a lightweight yet rugged magnesium alloy housing that minimizes weight while maintaining excellent durability. Its waterproof construction ensures reliable operation in harsh environmental conditions. The optical system is nitrogen-purged to prevent internal fogging and protect the lenses against fungal growth, ensuring long-term performance in demanding environments. With its ergonomic design, the BIN-20×120 is an ideal solution for long-range reconnaissance, surveillance, border security, and general military applications.

SPEC SUMMARY

Usage	Tripod
Objective Lens Diameter	120mm
Optical Magnification	20X
Field of View	2.4°
Eye Relief	20mm
Prism Type	Porro Prism
Diopter Adjustment	+5D ~ -7D

MAGNIFICATION
20X

WEIGHT
<10kg

DIMENSIONS (mm)
700 x 290 x 200

Actual performance may vary depending on atmospheric conditions, temperature, humidity, fog, precipitation, and other environmental factors. A tolerance of ±10% applies to all parameters.

WEAPON MOUNTED THERMAL VISION SYSTEMS

Weapon-Mounted Systems are advanced optical and electro-optical solutions designed to enhance shooter capability, situational awareness, and target engagement accuracy.

Mounted directly on individual weapons, these systems provide real-time visual information and precise aiming support across a wide range of operational scenarios.

By enabling effective usage in daytime, nighttime, and low-visibility conditions, weapon-mounted systems significantly improve detection, identification, and target engagement performance. The integration of advanced sensing technologies supports rapid decision-making and operational superiority in complex environments.

Designed to withstand demanding combat conditions, these systems are manufactured in accordance with military standards to resist shock, vibration, recoil, and extreme environmental factors. Their robust construction, ergonomic design, and seamless integration with weapon platforms ensure reliable performance, rapid deployment, and mission success.

PRODUCTS

40. ENGEREK-S27
(Thermal Weapon Sight)

41. ENGEREK-S48
(Thermal Weapon Sight)

42. ENGEREK-S56
(Thermal Weapon Sight)

43. ENGEREK-S70
(Thermal Weapon Sight)

44. ENGEREK-S120
(Thermal Weapon Sight)

45. ENGEREK-C45
(Clip-On Thermal Weapon Scope)

46. ENGEREK-C56
(Clip-On Thermal Weapon Scope)

47. ENGEREK-C70
(Clip-On Thermal Weapon Scope)

48. ENGEREK-C120
(Clip-On Thermal Weapon Scope)

49. ENGEREK-CS25
(Dual-Purpose Thermal Weapon Sight)

50. ENGEREK-CS37
(Dual-Purpose Thermal Weapon Sight)

51. ENGEREK-CS45
(Dual-Purpose Thermal Weapon Sight)

52. ENGEREK-CS56
(Dual-Purpose Thermal Weapon Sight)

53. ENGEREK-S27F
(Fusion Weapon Sight)

54. MTRS-3 AKÇAGÖZ
(Day-Night Fusion Weapon Sight)

55. S85LB
(Thermal Weapon Sight)

ENGEREK-S27

THERMAL WEAPON SIGHT

Thermal Imaging with Multiple Color Palettes

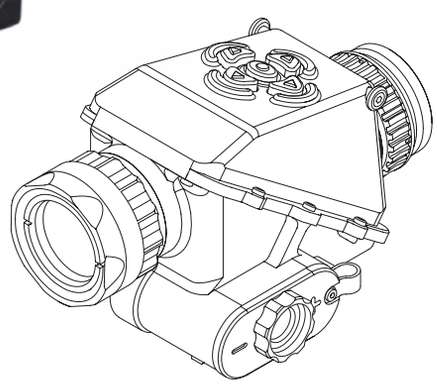

GENERAL FEATURES

S27 is a lightweight, high-performance uncooled thermal weapon sight designed for short and medium range operations. Its 27mm objective lens provides a wide field of view, enabling the operator to detect and track targets with high image quality in complete darkness and limited visibility conditions.

The S27 delivers clear thermal imaging, long battery life, and reliable continuous performance. Its compact and durable design ensures resistance to harsh field conditions. An optional Wi-Fi connection enables real-time image streaming.

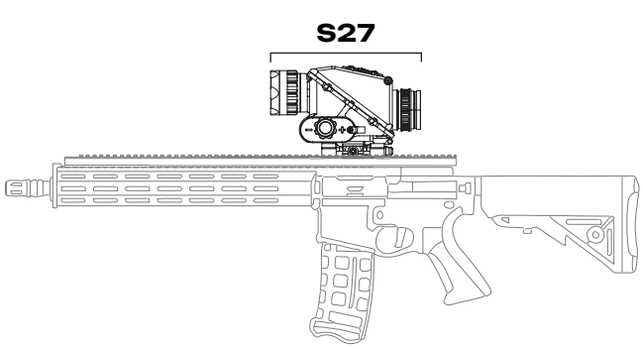

SPEC SUMMARY

Usage	Standalone
Detector Type	Uncooled µB
Spectral Band	8–14µm
Detector Resolution	640×512
Field of View	16.2° x 13°
Optical Magnification	1.68X
Digital Magnification	2X-4X-8X

Detection	**1300m**
Recognition	**430m**
Detection	**2500m**
Recognition	**860m**

OPERATING TIME
≥8h

WEIGHT
<550g

DIMENSIONS (mm)
150 x 98 x 83

**These calculations have been performed according to the Johnson criteria. Actual performance may vary depending on atmospheric conditions, temperature, humidity, fog, precipitation and other environmental factors.*
**A tolerance of ±10% applies to all parameters.*

ENGEREK-S48

THERMAL WEAPON SIGHT

Thermal Imaging with Multiple Color Palettes

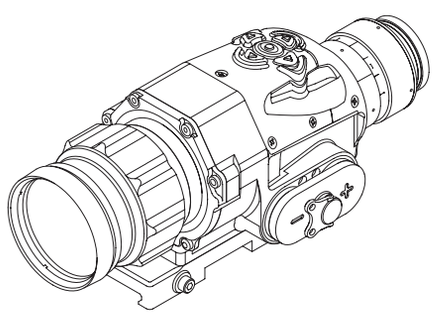

GENERAL FEATURES

S48 is a lightweight, high-performance uncooled thermal weapon sight designed for short and medium range operations. Its thermal detector and advanced optical system enable the operator to detect and precisely engage targets with high image quality in complete darkness and limited visibility conditions.

The S48 delivers clear thermal imaging, long battery life, and reliable continuous performance. Its compact and durable design ensures resistance to harsh field conditions. An optional Wi-Fi connection enables real-time image streaming.

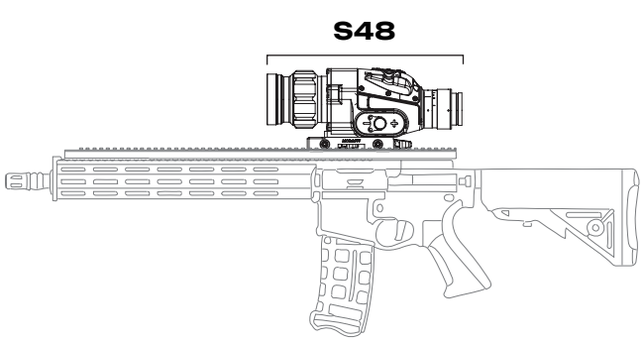

SPEC SUMMARY

Usage	Standalone
Detector Type	Uncooled µB
Spectral Band	8–14µm
Detector Resolution	640×512
Field of View	9.2° x 7.3°
Optical Magnification	3X
Digital Magnification	2X-4X-8X

Detection	**2300m**
Recognition	**770m**
Detection	**4500m**
Recognition	**1500m**

OPERATING TIME	WEIGHT	DIMENSIONS (mm)
≥8h	**<850g**	**227 x 98 x 85**

**These calculations have been performed according to the Johnson criteria. Actual performance may vary depending on atmospheric conditions, temperature, humidity, fog, precipitation and other environmental factors.*
**A tolerance of ±10% applies to all parameters.*

ENGEREK-S56

THERMAL WEAPON SIGHT

Thermal Imaging with Multiple Color Palettes

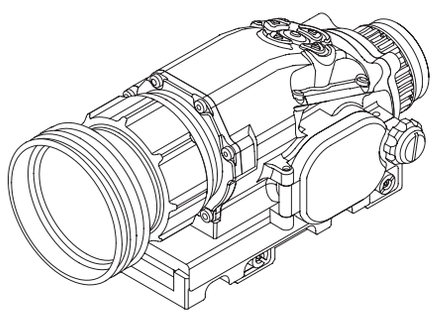

GENERAL FEATURES

S56 is a lightweight, high-performance uncooled thermal weapon sight designed for medium and long-range operations. Its thermal detector and advanced optical system enable the operator to detect and precisely engage targets with high image quality in complete darkness and limited visibility conditions.

The S56 delivers clear thermal imaging, long battery life, and reliable continuous performance. Its compact and durable design ensures resistance to harsh field conditions. An optional Wi-Fi connection enables real-time image streaming.

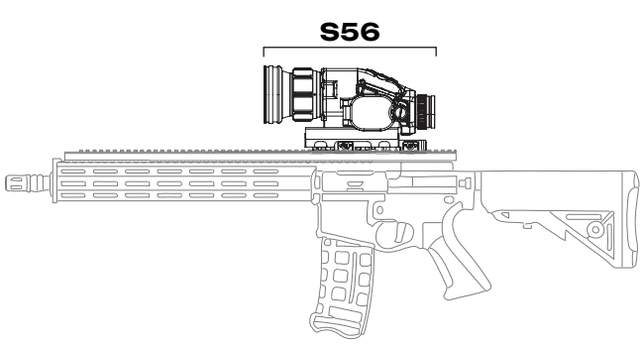

SPEC SUMMARY

Usage	Standalone
Detector Type	Uncooled µB
Spectral Band	8–14µm
Detector Resolution	640×512
Field of View	7.9° x 6.3°
Optical Magnification	3.4X
Digital Magnification	2X-4X-8X

Detection	**2600m**
Recognition	**880m**
Detection	**5300m**
Recognition	**1750m**

OPERATING TIME
≥8h

WEIGHT
<750g

DIMENSIONS (mm)
205 x 98 x 88

**These calculations have been performed according to the Johnson criteria. Actual performance may vary depending on atmospheric conditions, temperature, humidity, fog, precipitation and other environmental factors.*
**A tolerance of ±10% applies to all parameters.*

ENGEREK-S70

THERMAL WEAPON SIGHT

Thermal Imaging with Multiple Color Palettes

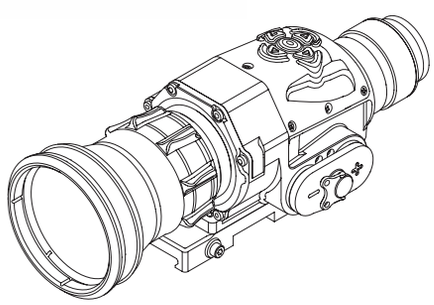

GENERAL FEATURES

S70 is a lightweight, high-performance uncooled thermal weapon sight designed for medium and long-range operations. Its thermal detector and advanced optical system enable the operator to detect and precisely engage targets with high image quality in complete darkness and limited visibility conditions.

The S70 delivers clear thermal imaging, long battery life, and reliable continuous performance. Its compact and durable design ensures resistance to harsh field conditions. An optional Wi-Fi connection enables real-time image streaming.

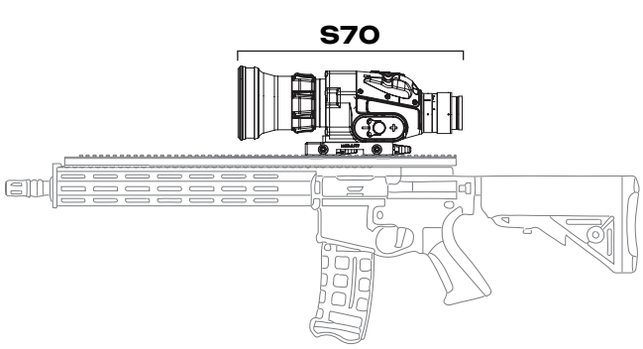

SPEC SUMMARY

Usage	Standalone
Detector Type	Uncooled µB
Spectral Band	8–14µm
Detector Resolution	640×512
Field of View	6.4° x 5.12°
Optical Magnification	4X
Digital Magnification	2X-4X-8X

Detection	**3300m**
Recognition	**1100m**
Detection	**6500m**
Recognition	**2100m**

OPERATING TIME	WEIGHT	DIMENSIONS (mm)
≥8h	**<950g**	**255 x 100 x 88**

**These calculations have been performed according to the Johnson criteria. Actual performance may vary depending on atmospheric conditions, temperature, humidity, fog, precipitation and other environmental factors.*
**A tolerance of ±10% applies to all parameters.*

ENGEREK-S120 / S120HD

THERMAL WEAPON SIGHT

Thermal Imaging with Multiple Color Palettes

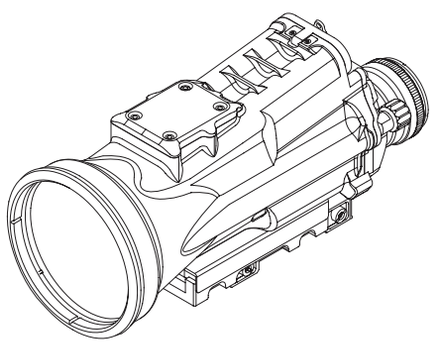

GENERAL FEATURES

S120 is a premium uncooled thermal sight developed for ultra-long-range surveillance and precision targeting missions. It enables high-resolution target detection and identification at extended distances.

An optionally integrated laser rangefinder provides fast and accurate distance measurement. With its advanced digital image processing architecture, long battery life, and rugged housing designed to withstand harsh environmental conditions, the S120 delivers reliable performance in long-range tactical operations.

S120 / S120HD

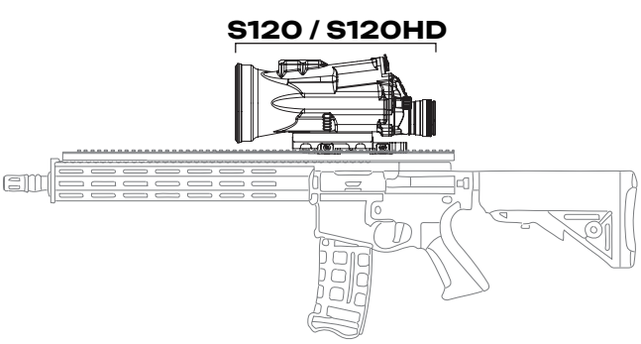

SPEC SUMMARY

	S-120	S-120HD
Usage	Standalone	
Detector Type	Uncooled µB	
Spectral Band	8–14µm	
Detector Resolution	640×512	1280×1024
Field of View	3.66° x 2.99°	7.31° x 5.85°
Optical Magnification	7.5X	3.77X
Digital Magnification	2X-4X-8X	

Detection	**5800m**
Recognition	**1900m**
Detection	**11000m**
Recognition	**3800m**

OPERATING TIME
≥8h

WEIGHT
<1.45kg

DIMENSIONS (mm)
285 x 115 x 125

**These calculations have been performed according to the Johnson criteria. Actual performance may vary depending on atmospheric conditions, temperature, humidity, fog, precipitation and other environmental factors.*
**A tolerance of ±10% applies to all parameters.*

ENGEREK-C45

CLIP-ON THERMAL WEAPON SIGHT

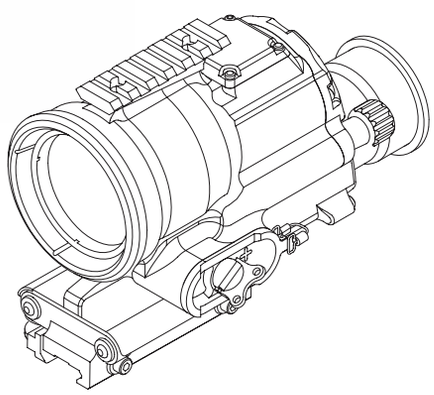

Thermal Imaging with Multiple Color Palettes

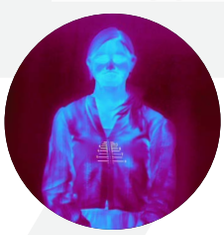

GENERAL FEATURES

C45 is a detachable uncooled thermal sight developed for medium and long-range operations, fully compatible with daytime optics. Its 45mm objective lens enables effective target detection and identification, while its clip-on design converts existing optics into a thermal system without requiring re-zeroing.

Providing high-quality thermal imaging in low-visibility conditions, the C45 ensures reliable field use with rapid deployment, long battery life, and a compact, rugged design.

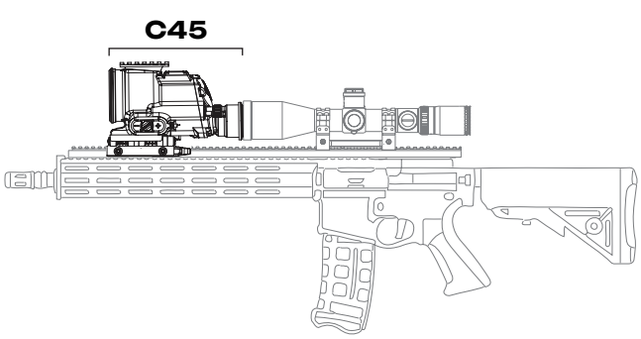

SPEC SUMMARY

Usage	Clip-On
Detector Type	Uncooled µB
Spectral Band	8–14µm
Detector Resolution	640×512
Field of View	9.75° x 7.81°
Optical Magnification	1X
Digital Magnification	2X-4X-8X

Detection	**2100m**
Recognition	**720m**
Detection	**4300m**
Recognition	**1430m**

OPERATING TIME
≥8h

WEIGHT
<800g

DIMENSIONS (mm)
230 x 103 x 88

**These calculations have been performed according to the Johnson criteria. Actual performance may vary depending on atmospheric conditions, temperature, humidity, fog, precipitation and other environmental factors.*
**A tolerance of ±10% applies to all parameters.*

ENGEREK-C56

CLIP-ON THERMAL WEAPON SIGHT

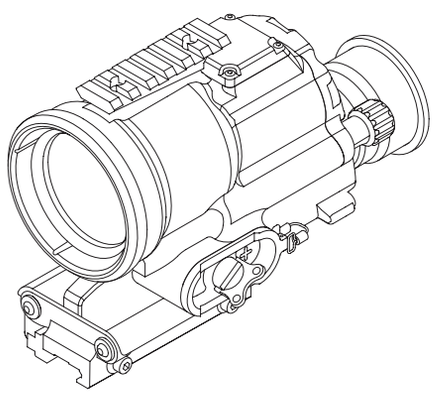

Thermal Imaging with Multiple Color Palettes

GENERAL FEATURES

C56 is an uncooled clip-on thermal sight designed for medium and long-range operations and intended for use with existing daytime binoculars. Its 56mm objective lens with a narrow field of view enables precise target detection and identification, while its clip-on design allows quick mounting in front of optics without the need for re-zeroing.

Providing clear thermal imaging in night and low-visibility conditions, the C56 delivers a reliable solution for missions requiring speed, accuracy, and modularity, with advanced digital image processing, long battery life, and a compact, rugged design.

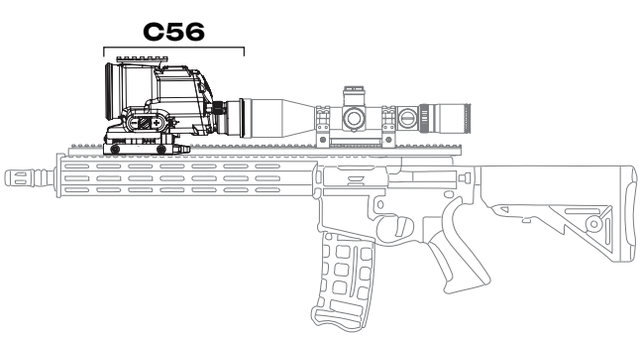

SPEC SUMMARY

Usage	Clip-On
Detector Type	Uncooled µB
Spectral Band	8–14µm
Detector Resolution	640×512
Field of View	7.85° x 6.28°
Optical Magnification	1X
Digital Magnification	2X-4X-8X

Detection	**2600m**
Recognition	**880m**
Detection	**5300m**
Recognition	**1750m**

OPERATING TIME	WEIGHT	DIMENSIONS (mm)
≥8h	**<900g**	**185 x 91 x 111**

**These calculations have been performed according to the Johnson criteria. Actual performance may vary depending on atmospheric conditions, temperature, humidity, fog, precipitation and other environmental factors.*
**A tolerance of ±10% applies to all parameters.*

ENGEREK-C70

CLIP-ON THERMAL WEAPON SIGHT

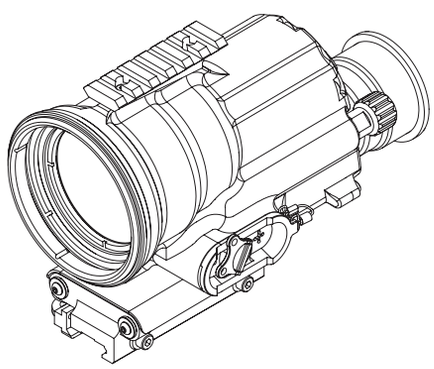

Thermal Imaging with Multiple Color Palettes

GENERAL FEATURES

C70 is an uncooled clip-on thermal sight designed for long-range operations. Its 70mm objective lens is optimized for clear target detection and identification at extended distances. The clip-on design allows rapid transition to thermal capability through front mounting onto daytime optics without the need for re-zeroing.

Offering high-resolution thermal imaging, long battery life, and a compact, rugged housing, the C70 is a reliable and modular solution for long-range precision missions and is suitable for special forces and professional users.

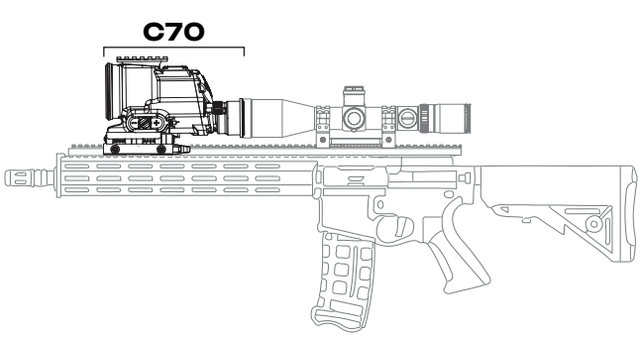

SPEC SUMMARY

Usage	Clip-On
Detector Type	Uncooled µB
Spectral Band	8–14µm
Detector Resolution	640×512
Field of View	6.4° x 5.12°
Optical Magnification	1X
Digital Magnification	2X-4X-8X

Detection	**3300m**
Recognition	**1100m**
Detection	**6500m**
Recognition	**2100m**

OPERATING TIME	WEIGHT	DIMENSIONS (mm)
≥8h	**<750g**	**198 x 89 x 113**

**These calculations have been performed according to the Johnson criteria. Actual performance may vary depending on atmospheric conditions, temperature, humidity, fog, precipitation and other environmental factors.*
**A tolerance of ±10% applies to all parameters.*

ENGEREK-C120 / C120HD

CLIP-ON THERMAL WEAPON SIGHT

Thermal Imaging with Multiple Color Palettes

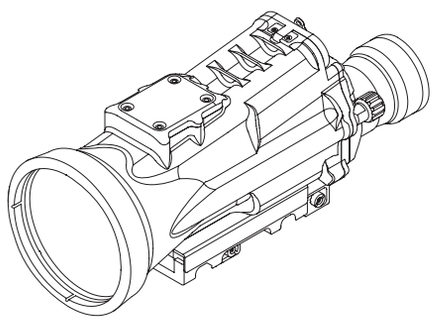

GENERAL FEATURES

C120 is a premium uncooled clip-on thermal sight developed for ultra-long-range surveillance and precision targeting missions. It enables high-resolution target detection and identification at extended distances. The clip-on design allows rapid transition to thermal capability through front mounting onto daytime optics without the need for re-zeroing.

An optionally integrated laser rangefinder provides fast and accurate distance measurement. With its advanced digital image processing architecture, long battery life, and rugged housing designed to withstand harsh environmental conditions, the C120 delivers reliable performance in long-range tactical operations.

C120-120HD

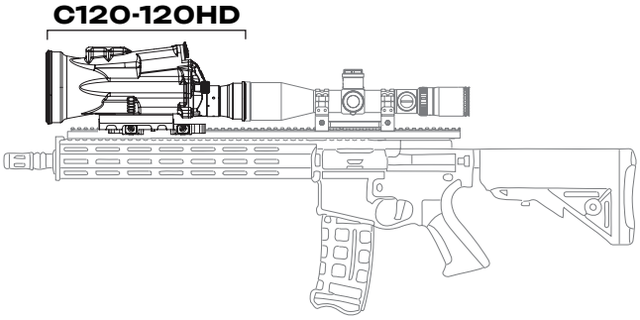

SPEC SUMMARY

	C-120	C-120HD
Usage	Clip-On	
Detector Type	Uncooled µB	
Spectral Band	8–14µm	
Detector Resolution	640×512	1024×768
Field of View	3.66° x 2.93°	5.85° x 4.39°
Optical Magnification	1X	
Digital Magnification	2X-4X-8X	

Detection	**5800m**
Recognition	**1900m**
Detection	**11000m**
Recognition	**3800m**

OPERATING TIME
≥8h

WEIGHT
<1.5kg

DIMENSIONS (mm)
295 x 115 x 125

**These calculations have been performed according to the Johnson criteria. Actual performance may vary depending on atmospheric conditions, temperature, humidity, fog, precipitation and other environmental factors.*
**A tolerance of ±10% applies to all parameters.*

ENGEREK-CS25

DUAL-PURPOSE THERMAL WEAPON SIGHT

Thermal Imaging with Multiple Color Palettes

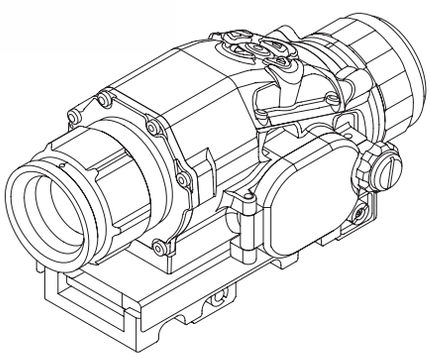

GENERAL FEATURES

CS25 is a uncooled thermal weapon sight designed for short and medium range operational use, supporting both clip-on and standalone sight configurations. The system integrates a high-precision thermal detector and an advanced optical system, providing reliable target identification and accurate aiming capability at extended distances.

In clip-on configuration, the CS25 can be mounted in front of daytime optics without requiring re-zeroing. By switching configurations, the same system can also be used as a standalone weapon sight. The CS25 delivers reliable performance under harsh operational conditions.

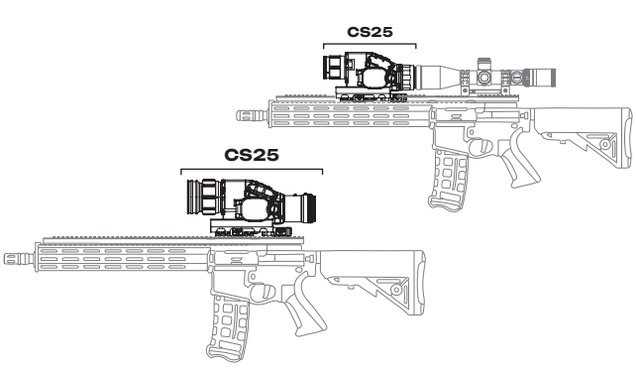

SPEC SUMMARY

Usage *(Dual-Purpose)*	Clip-On / Standalone
Detector Type	Uncooled µB
Spectral Band	8–14µm
Detector Resolution	640×512
Field of View	17.5° x 14°
Optical Magnification	1X *(Clip-On)* - 2X *(Standalone)*
Digital Magnification	2X-4X-8X

Detection	**1200m**
Recognition	**400m**
Detection	**2200m**
Recognition	**800m**

OPERATING TIME	WEIGHT	DIMENSIONS (mm)
≥8h	**<650g**	**190 x 98 x 83**

**These calculations have been performed according to the Johnson criteria. Actual performance may vary depending on atmospheric conditions, temperature, humidity, fog, precipitation and other environmental factors.*
**A tolerance of ±10% applies to all parameters.*

ENGEREK-CS37

DUAL-PURPOSE THERMAL WEAPON SIGHT

Thermal Imaging with Multiple Color Palettes

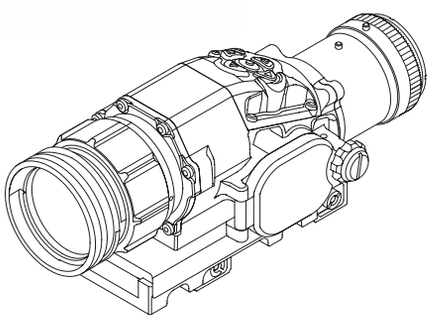

GENERAL FEATURES

CS37 is a uncooled thermal weapon sight designed for short and medium range operational use, supporting both clip-on and standalone sight configurations. The system integrates a high-precision thermal detector and an advanced optical system, providing reliable target identification and accurate aiming capability at extended distances.

In clip-on configuration, the CS37 can be mounted in front of daytime optics without requiring re-zeroing. By switching configurations, the same system can also be used as a standalone weapon sight. The CS37 delivers reliable performance under harsh operational conditions.

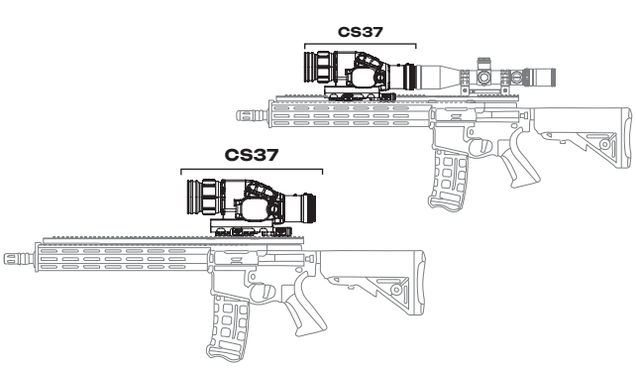

SPEC SUMMARY

Usage *(Dual-Purpose)*	Clip-On / Standalone
Detector Type	Uncooled µB
Spectral Band	8–14µm
Detector Resolution	640×512
Field of View	12° x 9.6°
Optical Magnification	1X *(Clip-On)* - 2X *(Standalone)*
Digital Magnification	2X-4X-8X

Detection	**1700m**
Recognition	**550m**
Detection	**3400m**
Recognition	**1100m**

OPERATING TIME	WEIGHT	DIMENSIONS (mm)
≥8h	**<650g**	**215 x 98 x 83**

**These calculations have been performed according to the Johnson criteria. Actual performance may vary depending on atmospheric conditions, temperature, humidity, fog, precipitation and other environmental factors.*
**A tolerance of ±10% applies to all parameters.*

ENGEREK-CS45

DUAL-PURPOSE THERMAL WEAPON SIGHT

Thermal Imaging with Multiple Color Palettes

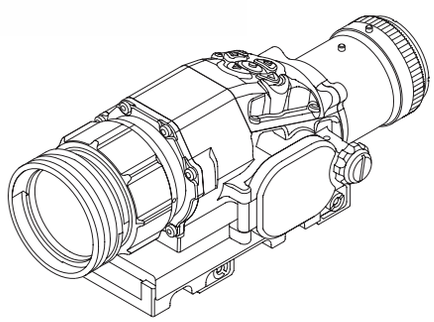

GENERAL FEATURES

CS45 is a uncooled thermal weapon sight designed for medium and long-range operational use, supporting both clip-on and standalone sight configurations. The system integrates a high-precision thermal detector and an advanced optical system, providing reliable target identification and accurate aiming capability at extended distances.

In clip-on configuration, the CS45 can be mounted in front of daytime optics without requiring re-zeroing. By switching configurations, the same system can also be used as a standalone weapon sight. The CS45 delivers reliable performance under harsh operational conditions.

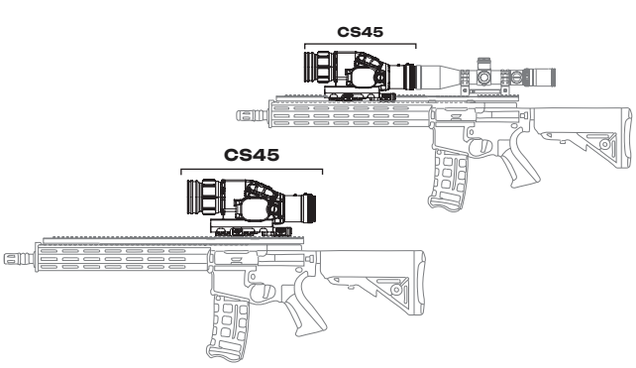

SPEC SUMMARY

Usage *(Dual-Purpose)*	Clip-On / Standalone
Detector Type	Uncooled µB
Spectral Band	8–14µm
Detector Resolution	640×512
Field of View	9.8° x 7.8°
Optical Magnification	1X *(Clip-On)* - 2X *(Standalone)*
Digital Magnification	2X-4X-8X

Detection	**2100m**
Recognition	**720m**
Detection	**4300m**
Recognition	**1430m**

OPERATING TIME
≥8h

WEIGHT
<800g

DIMENSIONS (mm)
230 x 98 x 82

**These calculations have been performed according to the Johnson criteria. Actual performance may vary depending on atmospheric conditions, temperature, humidity, fog, precipitation and other environmental factors.*
**A tolerance of ±10% applies to all parameters.*

ENGEREK-CS56

DUAL-PURPOSE THERMAL WEAPON SIGHT

Thermal Imaging with Multiple Color Palettes

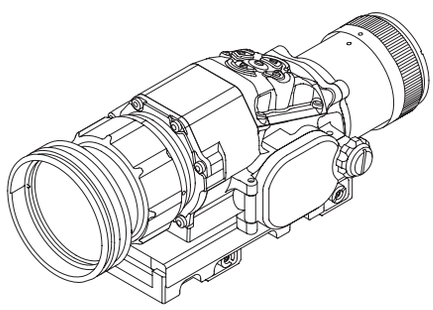

GENERAL FEATURES

CS56 is an uncooled thermal weapon sight designed for medium and long-range missions, capable of operating in both clip-on and standalone sight modes. Its high-precision thermal detector and lens assembly enable accurate target identification and aiming at extended distances.

In clip-on mode, the CS56 can be mounted in front of daytime optics without requiring re-zeroing, while the same device can also be used as a standalone sight by switching modes. With high-quality thermal imaging, an advanced digital architecture, long battery life, and a rugged housing, the CS56 delivers reliable performance under harsh operational conditions.

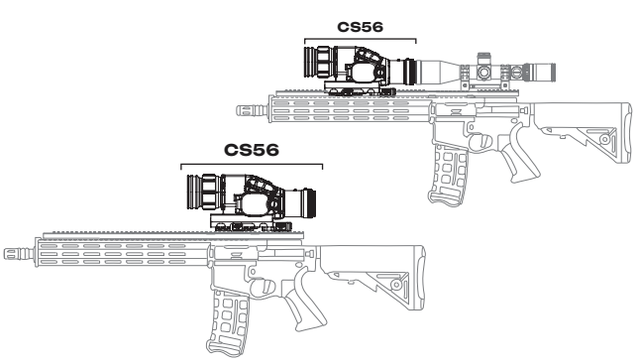

SPEC SUMMARY

Usage *(Dual-Purpose)*	Clip-On / Standalone
Detector Type	Uncooled µB
Spectral Band	8–14µm
Detector Resolution	640×512
Field of View	7.9° x 6.3°
Optical Magnification	1X *(Clip-On)* - 2X *(Standalone)*
Digital Magnification	2X-4X-8X

Detection	**2600m**
Recognition	**880m**
Detection	**5300m**
Recognition	**1750m**

OPERATING TIME	WEIGHT	DIMENSIONS (mm)
≥8h	**<900g**	**235 x 98 x 83**

**These calculations have been performed according to the Johnson criteria. Actual performance may vary depending on atmospheric conditions, temperature, humidity, fog, precipitation and other environmental factors.*
**A tolerance of ±10% applies to all parameters.*

QEYE-S27F

FUSION WEAPON SIGHT (THERMAL & LOW-LIGHT)

Fusion Imaging with Multiple Color Palettes

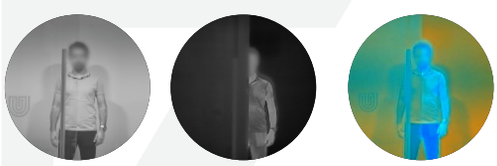

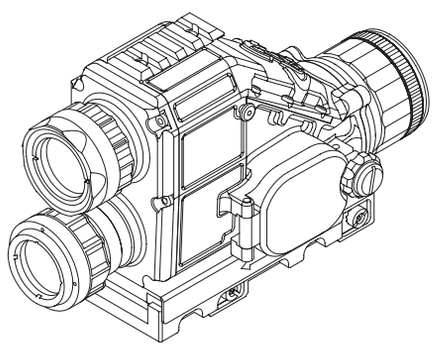

GENERAL FEATURES

S27F Fusion Sight System is an advanced fusion system that combines imagery from a low-light day camera and a thermal camera to provide the user with highly precise and detailed visuals.

The S27F Fusion Sight System enables clear target detection in daytime, nighttime, or low-visibility conditions. The system features three different imaging modes: day mode, thermal mode, and fusion mode.

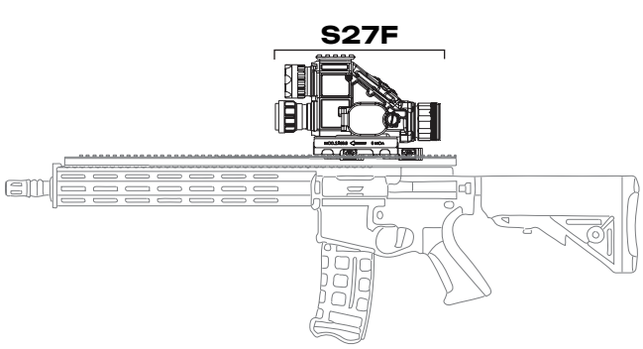

SPEC SUMMARY

	THERMAL	DAY CAMERA *(Low Light)*
Usage	Standalone / Handheld	
Detector Type	Uncooled µB	CMOS
Spectral Band	8–14µm	0.4-1.1µm
Field of View	16.3°	
Digital Magnification	2X-4X-8X	
Imaging Modes	Low Light / Thermal / Fusion / Color Fusion	

Detection	**1550m**
Recognition	**510m**
Detection	**3060m**
Recognition	**1020m**

OPERATING TIME	WEIGHT	DIMENSIONS (mm)
≥8h	**<850g**	**215 x 140 x 98**

**These calculations have been performed according to the Johnson criteria. Actual performance may vary depending on atmospheric conditions, temperature, humidity, fog, precipitation and other environmental factors.*
**A tolerance of ±10% applies to all parameters.*

MTRS-3 AKÇAGÖZ

DAY & NIGHT FUSION WEAPON SIGHT

Fusion Imaging with Multiple Color Palettes

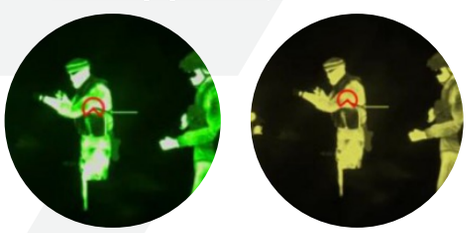

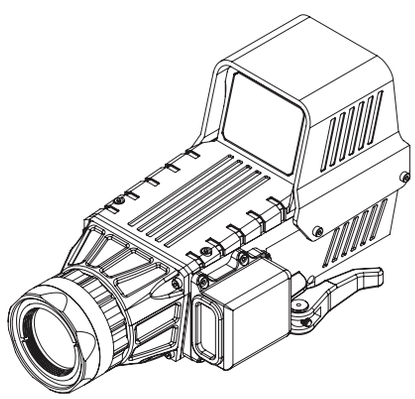

GENERAL FEATURES

MTRS-3 / AKÇAGÖZ is a compact fused weapon sighting system designed for 5.56 / 7.62 caliber assault rifles and light machine guns. Its fusion architecture combines the reflex sight image with high-contrast thermal imaging, providing a clear direct-view channel along with support for configurable digital reticles.

Its lightweight design and low power consumption, combined with advanced camera and display technologies, make the MTRS-3 / AKÇAGÖZ stand out among next-generation sighting systems. It ensures reliable target detection in all day and night conditions.

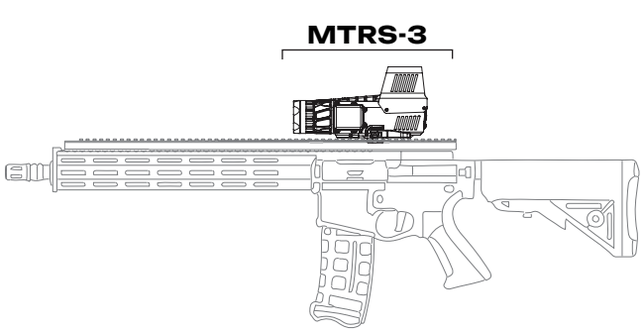

SPEC SUMMARY

Usage *(Dual-Purpose)*	Clip-On / Standalone
Imaging Modes	Reflex / Thermal / Fusion
Detector Type	Uncooled µB
Spectral Band	8–14µm
Detector Resolution	640×512
Field of View	16.3° x 25.9°
Optical Magnification	1X
Digital Magnification	1X-2X

Detection	**1300m**
Recognition	**430m**
Detection	**2500m**
Recognition	**860m**

OPERATING TIME	WEIGHT	DIMENSIONS (mm)
≥7h	**<650g**	**176 x 87 x 103**

**These calculations have been performed according to the Johnson criteria. Actual performance may vary depending on atmospheric conditions, temperature, humidity, fog, precipitation and other environmental factors.*
**A tolerance of ±10% applies to all parameters.*

S85LB

THERMAL WEAPON SIGHT (BALLISTIC CALCULATOR & RANGEFINDER)

Thermal Imaging with Multiple Color Palettes

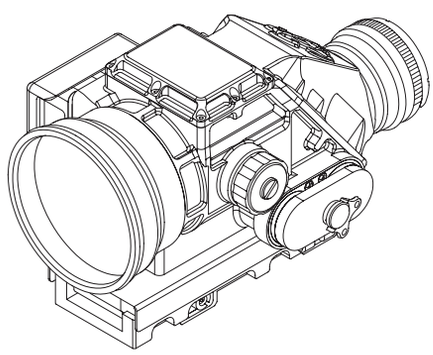

GENERAL FEATURES

S85LB is a system capable of continuous 24/7 personnel and vehicle detection under degraded visual conditions, enabling effective target acquisition in complete darkness and combat environments. It has been specifically designed to address the long-range precision target detection and engagement requirements of sniper operators.

Featuring state-of-the-art uncooled thermal imaging technology integrated with a laser rangefinder and ballistic calculator, the S85LB delivers low power consumption in a lightweight and compact form factor. The system supports both ballistic and cross reticle configurations.

The ballistic calculator evaluates ammunition, weapon, and environmental parameters to provide the operator with a recommended aiming point based on the distance measured by the laser rangefinder and current meteorological conditions.

S85LB

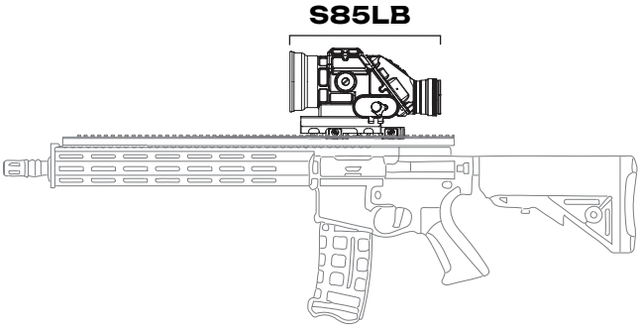

SPEC SUMMARY

Usage	Standalone
Detector Type	Uncooled µB
Spectral Band	8–14µm
Detector Resolution	640×512
Field of View	5.17° x 4.14°
Optical Magnification	5.3X
Digital Magnification	2X-4X-8X

Detection	**4100m**
Recognition	**1300m**
Detection	**8100m**
Recognition	**2700m**

OPERATING TIME	WEIGHT	DIMENSIONS (mm)
≥8h	**<1.1kg**	**210 x 122 x 96**

**These calculations have been performed according to the Johnson criteria. Actual performance may vary depending on atmospheric conditions, temperature, humidity, fog, precipitation and other environmental factors.*
**A tolerance of ±10% applies to all parameters.*

WEAPON MOUNTED DAY-NIGHT VISION SYSTEMS

Weapon-Mounted Systems are advanced optical and electro-optical solutions designed to enhance shooter capability, situational awareness, and target engagement accuracy.

Mounted directly on individual weapons, these systems provide real-time visual information and precise aiming support across a wide range of operational scenarios.

By enabling effective usage in daytime, nighttime, and low-visibility conditions, weapon-mounted systems significantly improve detection, identification, and target engagement performance. The integration of advanced sensing technologies supports rapid decision-making and operational superiority in complex environments.

Designed to withstand demanding combat conditions, these systems are manufactured in accordance with military standards to resist shock, vibration, recoil, and extreme environmental factors. Their robust construction, ergonomic design, and seamless integration with weapon platforms ensure reliable performance, rapid deployment, and mission success.

PRODUCTS

58. S50SW - S75SW
(Swir Weapon Sight)

59. NVA-13
(Clip-On Night Vision Weapon Attachment)

60. NVA-13R
(Clip-On Night Vision Attachment)

61. NWS-4
(Night Vision Weapon Sight)

62. NWS-6
(Night Vision Weapon Sight)

63. KND 3-12x50
(Sniper Scope)

64. KND 5-25x56
(Sniper Scope)

65. HS-10
(Holographic Sight)

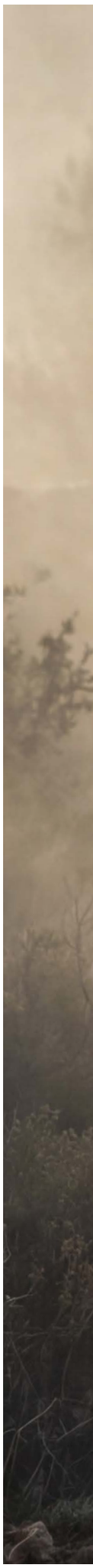

ENGEREK S50SW-S75SW

SWIR WEAPON SIGHT

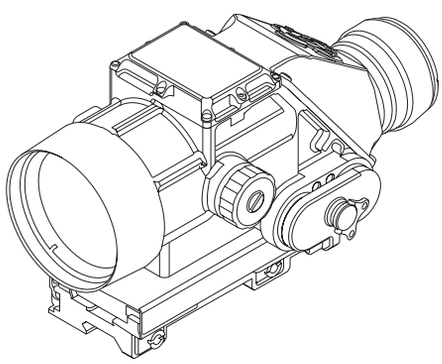

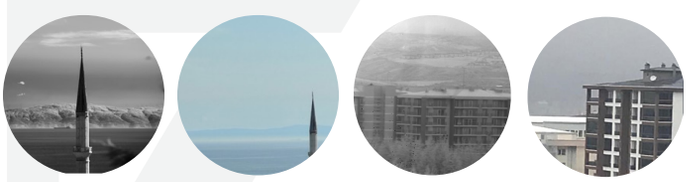

GENERAL FEATURES

ENGEREK S50SW-S75SW thermal sight uses shortwave infrared (SWIR) detection technology to provide effective target acquisition in low-light conditions and in environments with visibility obstacles such as smoke and haze. Its high-sensitivity sensor delivers enhanced image clarity, enabling rapid target detection and improved situational awareness.

Thanks to its lightweight, compact, and rugged design, it offers high resistance to recoil and harsh environmental conditions. It also provides compatibility with multiple weapon platforms, ensuring operational flexibility in modern combat environments.

S50SW-S75SW

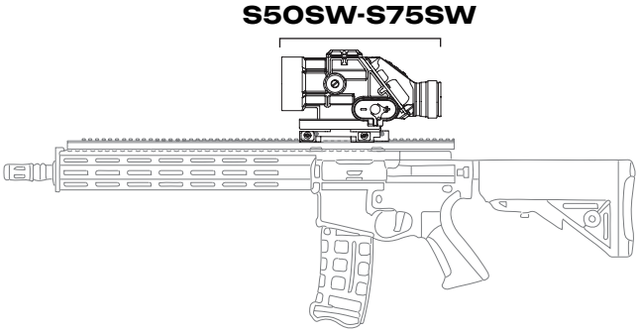

SPEC SUMMARY

	S50SW	S75SW
Usage	Standalone	
Spectral Band	0.9–1.7µm	
Detector Resolution	640×512	
Field of View	10.96° x 8.78°	7.32° x 5.86°
Optical Magnification	3X	4.5X
Digital Magnification	2X-4X-8X	

Detection	**1900m**
Recognition	**650m**
Detection	**3800m**
Recognition	**1200m**

OPERATING TIME
≥8h

WEIGHT
<1.05kg

DIMENSIONS (mm)
216 x 100 x 105

**These calculations have been performed according to the Johnson criteria. Actual performance may vary depending on atmospheric conditions, temperature, humidity, fog, precipitation and other environmental factors.*
**A tolerance of ±10% applies to all parameters.*

NVA-13

CLIP-ON NIGHT VISION WEAPON ATTACHMENT

P43 *(Green)*

P45 *(White)*

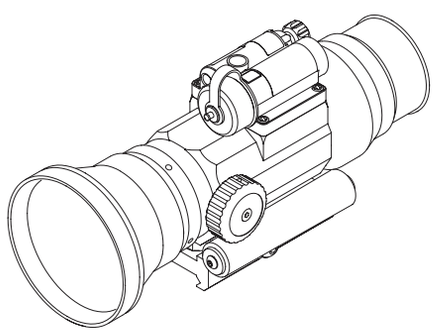

GENERAL FEATURES

NVA-13 is a lightweight and compact night vision clip-on system designed to enable the use of daytime optical sights in night conditions. Thanks to its unique optical design, it is smaller and lighter compared to similar systems, allowing users to achieve more effective imaging under low-light conditions during night operations. Its clip-on design enables mounting in front of existing daytime optics without requiring re-zeroing.

Equipped with a high-resolution image intensifier tube, the NVA-13 provides a reliable and practical night vision capability ideal for medium range missions. An optional infrared illuminator offers superior target acquisition in complete darkness.

SPEC SUMMARY

Usage	Clip-On
Field of View	13°
Focus Range	30m - ∞
Image Color *(Optional)*	P43 *(Green)* / P45 *(White)*
Image Intensifier Tube	FOM *(Optional)* 1600 / 1800 / 2000 / 2200
Environmental Standards	MIL-STD 810G-H

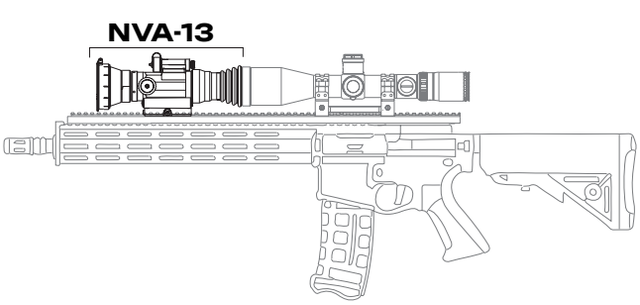

OPERATING TIME
≥50h

WEIGHT
<620g

DIMENSIONS (mm)
195 x 75 x 85

**Performance values are based on moonlight conditions; actual image intensifier tube performance may vary due to ambient illumination level and environmental factors.*
**A tolerance of ±10% applies to all parameters.*

NVA-13R

CLIP-ON NIGHT VISION WEAPON ATTACHMENT

P43 *(Green)*

P45 *(White)*

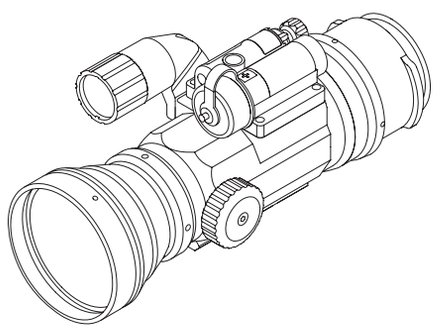

GENERAL FEATURES

NVA-13R is an advanced night vision clip-on system that enables the use of existing daytime optical sights at night with the same settings and shooting habits. Its reflective optical design provides a lighter, more compact, and better-balanced structure compared to similar systems.

Equipped with a high-quality image intensifier tube, the NVA-13R can be aligned with both fixed and variable magnification daytime scopes and operates without requiring re-zeroing. The system can be integrated with the RPG-7 platform and delivers clear, stable imaging under low-light conditions. Its ultra-lightweight and rugged design ensures reliable, military-grade performance for demanding tactical missions.

SPEC SUMMARY

Usage	Clip-On
Field of View	13°
Focus Range	30m - ∞
Illuminator	IR
Image Color *(Optional)*	P43 *(Green)* / P45 *(White)*
Image Intensifier Tube	FOM *(Optional)* 1600 / 1800 / 2000 / 2200
Environmental Standards	MIL-STD 810G-H

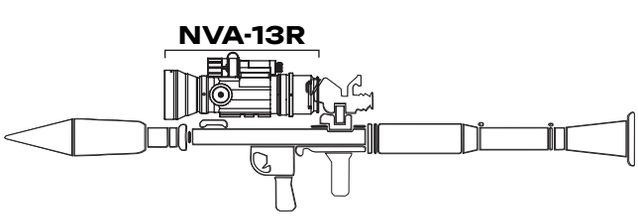

OPERATING TIME
≥50h

WEIGHT
<620g

DIMENSIONS (mm)
195 x 85 x 85

**Performance values are based on moonlight conditions; actual image intensifier tube performance may vary due to ambient illumination level and environmental factors.*
**A tolerance of ±10% applies to all parameters.*

NWS-4X

NIGHT VISION WEAPON SIGHT

P43 *(Green)*

P45 *(White)*

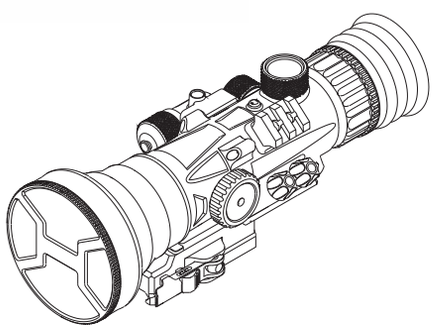

GENERAL FEATURES

NWS-4X is a standalone night vision weapon sight designed to provide 4X magnification for various mission requirements. Optimized for short and medium-range operations, the system has been designed for weapon-mounted applications, delivering fast, intuitive, and effective aiming capability.

Equipped with a high-resolution image intensifier tube, the NWS-4X delivers clear and stable imaging under low-light conditions. Its ergonomic design and military-grade durability ensure reliable performance in long-duration and demanding operations where speed and precision are critical.

SPEC SUMMARY

Usage	Standalone
Field of View	8°
Optical Magnification	4X
Image Color *(Optional)*	P43 *(Green)* / P45 *(White)*
Image Intensifier Tube	FOM *(Optional)* 1600 / 1800 / 2000 / 2200
Environmental Standards	MIL-STD 810G-H

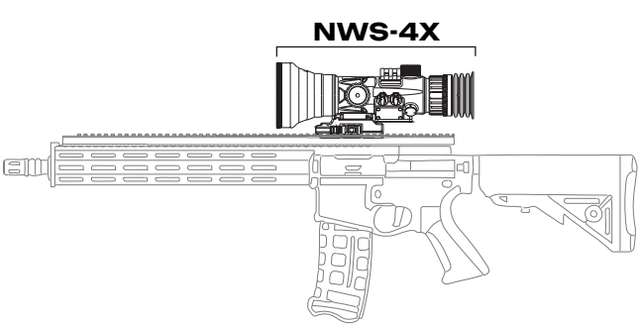

OPERATING TIME
≥50h

WEIGHT
<1kg

DIMENSIONS (mm)
220 x 85 x 95

**Performance values are based on moonlight conditions; actual image intensifier tube performance may vary due to ambient illumination level and environmental factors.*
**A tolerance of ±10% applies to all parameters.*

NWS-6X

NIGHT VISION WEAPON SIGHT

P43 *(Green)*

P45 *(White)*

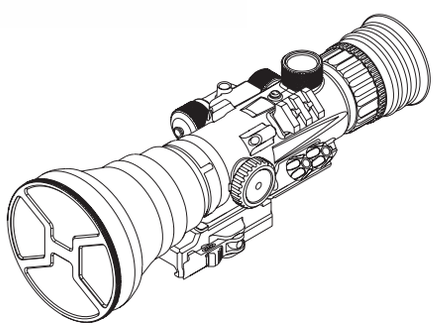

GENERAL FEATURES

NWS-6X is a standalone night vision weapon sight designed to provide 6X magnification for various mission requirements. Optimized for short and medium-range operations, the system has been designed for weapon-mounted applications, delivering fast, intuitive, and effective aiming capability.

Equipped with a high-resolution image intensifier tube, the NWS-6X delivers clear and stable imaging under low-light conditions. Its ergonomic design and military-grade durability ensure reliable performance in long-duration and demanding operations where speed and precision are critical.

SPEC SUMMARY

Usage	Standalone
Field of View	8°
Optical Magnification	6X
Image Color *(Optional)*	P43 *(Green)* / P45 *(White)*
Image Intensifier Tube	FOM *(Optional)* 1600 / 1800 / 2000 / 2200
Environmental Standards	MIL-STD 810G-H

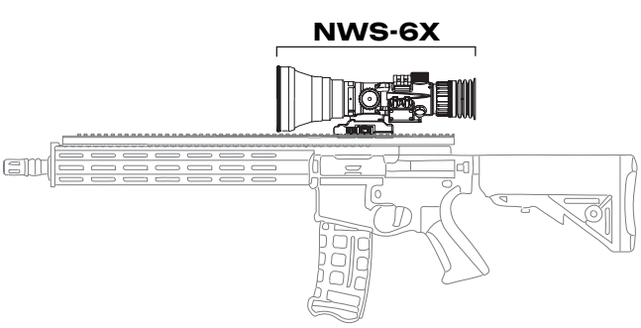

OPERATING TIME
≥50h

WEIGHT
<1.8kg

DIMENSIONS (mm)
247 x 94 x 103

**Performance values are based on moonlight conditions; actual image intensifier tube performance may vary due to ambient illumination level and environmental factors.*
**A tolerance of ±10% applies to all parameters.*

KND 3-12x50

SNIPER SCOPE

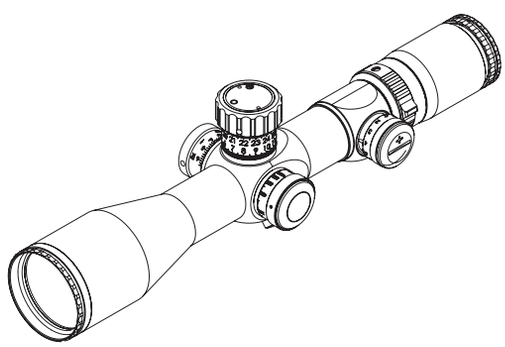

GENERAL FEATURES

KND 3–12×50 is designed for long-range precision shooting with a 3–12x magnification range and a 50mm objective lens. Its aerospace-grade aluminum body and anodized finish provide high durability. Low-dispersion optical glass and anti-reflective coating deliver clear, true-color images, while an 11-level illuminated reticle facilitates aiming in low-light conditions.

A specialized turret mechanism and side parallax adjustment ensure precise and reliable targeting. Tested according to MIL-STD-810 standards, the system is waterproof and shock-resistant, making it suitable for professional use.

SPEC SUMMARY

Usage	Standalone
Field of View	6.7° *(3X)* x 1.8° *(12X)*
Eye Relief	80mm
Optical Magnification	3-12X
Objective Lens Diameter	50mm
Reticle	MIL-DOT
Environmental Standards	MIL-STD 810G-H

KND 3-12X50

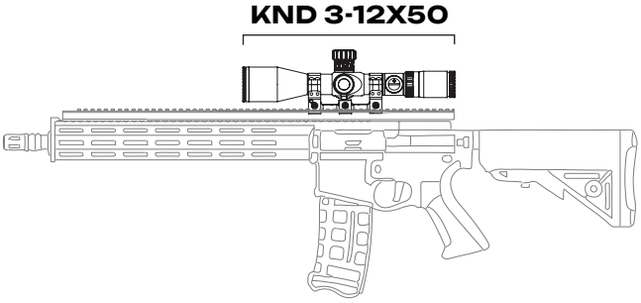

MAGNIFICATION
3X - 12X

WEIGHT
<920g

DIMENSIONS (mm)
350 x 90 x 75

**A tolerance of ±10% applies to all parameters.*

KND 5-25x56

SNIPER SCOPE

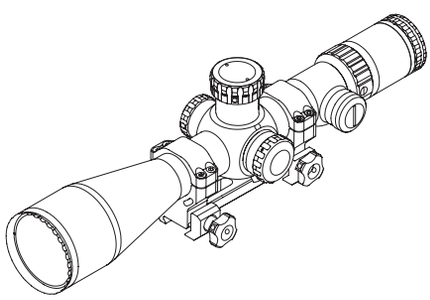

GENERAL FEATURES

KND 5–25×56 is optimized for long and ultra-long-range shooting with a 5–25X magnification range and a large 56mm objective lens. Its one-piece aerospace-grade aluminum body ensures maximum durability and field reliability.

Low-dispersion optics and anti-reflective coatings provide superior clarity and accurate color reproduction, while the 11-level illuminated reticle enables effective aiming in low-light conditions. Zero-stop, high-precision turrets and side parallax adjustment deliver the accuracy required for long-range engagements. Tested according to MIL-STD-810 standards, the KND 5–25×56 is waterproof, shock-resistant, and fog-proof, making it a reliable high-performance daytime optic for advanced shooters and snipers.

SPEC SUMMARY

Usage	Standalone
Field of View	0.86° x 3°
Eye Relief	80mm
Optical Magnification	5X - 25X
Objective Lens Diameter	56mm
Reticle	MIL-DOT
Environmental Standards	MIL-STD 810G-H

KND 5-25x56

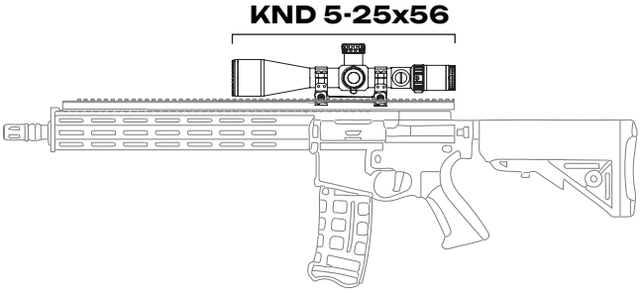

MAGNIFICATION
5X - 25X

WEIGHT
<1.25kg

DIMENSIONS (mm)
395 x 90 x 75

*A tolerance of ±10% applies to all parameters.

HS-10

HOLOGRAPHIC SIGHT

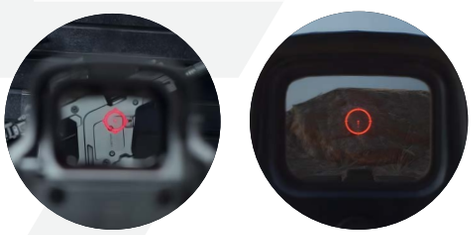

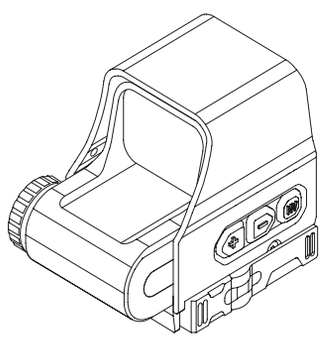

GENERAL FEATURES

HS-10 is an optical sight featuring combat-proven laser hologram technology. It is compatible with night vision systems and magnifiers, making it effective for both day and night operations and an ideal solution for short and medium range engagements.

Its holographic reticle allows for two-eye-open shooting, enhancing situational awareness and enabling rapid target acquisition. Unlike red dot sights, the reticle is visible only to the shooter, providing a tactical advantage in covert operations. With unlimited eye relief and the ability to remain operational even if the lens is damaged or partially obstructed, the HS-10 delivers reliable performance in the most demanding field conditions thanks to its compact and rugged design.

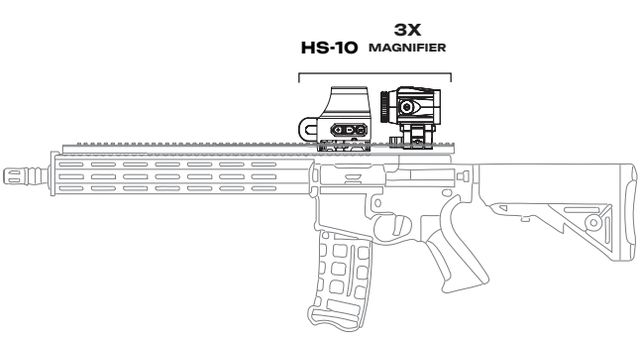

SPEC SUMMARY

Usage	Standalone
Field of View	17º
Eye Relief	70mm
Display Size	30×23mm
Battery Type	1x CR123
Add-On Optional	3X Magnifier
Environmental Standards	MIL-STD 810G-H

OPERATING TIME
≥250h

WEIGHT
<230g

DIMENSIONS (mm)
78 x 57 x 67

*A tolerance of ±10% applies to all parameters.

HELMET MOUNTED SYSTEMS

Helmet-mounted systems are advanced electro-optical solutions designed to be directly integrated into the operator's helmet, enhancing situational awareness, operational effectiveness, and user safety. These systems provide hands-free, real-time visual information, enabling operators to maintain full mobility and focus in challenging operational environments.

Optimized for daytime, nighttime, and low-visibility conditions, helmet-mounted systems support rapid detection, identification, and continuous monitoring of the surrounding environment. By extending the operator's visual capabilities, they significantly improve reaction time, decision-making speed, and mission performance.

Developed in accordance with military standards, these systems are built to withstand harsh environmental and operational conditions, including shock, vibration, and extreme temperatures. Their lightweight design, ergonomic structure, and seamless helmet integration ensure long-term comfort, operational reliability, and sustained mission effectiveness.

PRODUCTS

68. PNVG-40
(Pilot Night Vision Goggles)

69. MON-3
(Monocular Night Vision Goggles)

70. BIN-3
(Binocular Night Vision Goggles)

71. QEYE 007 B-18X
(Fusion Binocular Goggles)

72. ARMADILLO AS-10
(Friend or Foe Identification and Emergency Strobe)

73. ARMADILLO AS-30
(Friend or Foe Identification and Emergency Strobe)

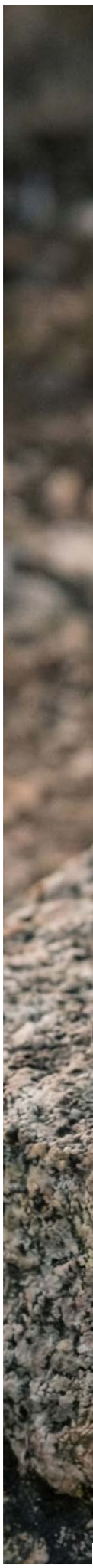

PNVG-40

PILOT NIGHT VISION GOGGLES

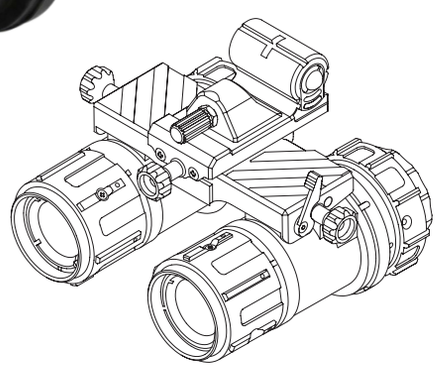

P43 *(Green)*

P45 *(White)*

GENERAL FEATURES

PNVG-40 is a night vision goggle system specially developed for pilots. It delivers high performance in low-light environments such as moonlight or starlight. Its wide field of view enhances maneuverability, particularly in helicopters, providing reliable use for reconnaissance, surveillance, search and rescue, and low-altitude flight missions.

Its ergonomic design allows easy adjustment of interpupillary distance, vertical position, fore-aft positioning, and tilt. Manual Gain Control (MGC) enables precise brightness adjustment, reducing glare and improving detail visibility. With its lightweight, durable construction and compliance with military aviation standards, the PNVG-40 offers comfort and reliability across all air platforms.

SPEC SUMMARY

Usage	Pilot Helmet
Field of View	40°
Eye Relief	25mm
Optical Magnification	1X
Image Color *(Optional)*	P43 *(Green)* / P45 *(White)*
Image Intensifier Tube	FOM *(Optional)* 1600 / 1800 / 2000 / 2200
Environmental Standards	MIL-STD 810G-H

PNVG-40

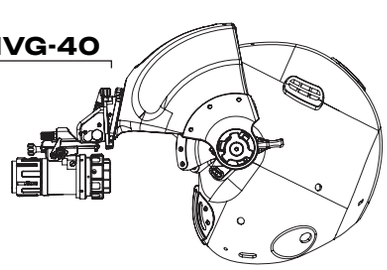

OPERATING TIME
≥100h

WEIGHT
<580g

DIMENSIONS (mm)
140 x 115 x 95

**Performance values are based on moonlight conditions; actual image intensifier tube performance may vary due to ambient illumination level and environmental factors.*
**A tolerance of ±10% applies to all parameters.*

MON-3

MONOCULAR NIGHT VISION GOGGLES

P43 *(Green)*

P45 *(White)*

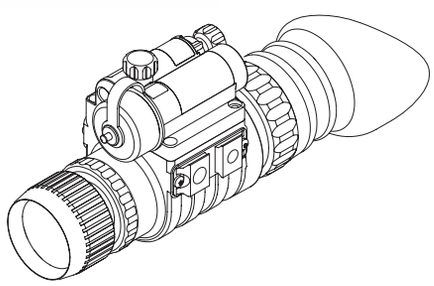

GENERAL FEATURES

The MON-3/7 Series is a classic night vision monocular system with a lightweight and ergonomic design. Its composite housing incorporates military-grade optics, providing clear and sharp imaging under low-light conditions.

The device can be used handheld or easily adapted to different mission profiles by mounting it on a headgear, helmet, or weapon using dedicated accessories. With a special mounting adapter, the system can also be configured into a dual-tube (twin monocular) setup, offering a reliable and versatile night vision solution.

SPEC SUMMARY

Usage	Helmet
Field of View	40°
Eye Relief	25mm
Optical Magnification	1X
Image Color *(Optional)*	P43 *(Green)* / P45 *(White)*
Image Intensifier Tube	FOM *(Optional)* 1600 / 1800 / 2000 / 2200
Environmental Standards	MIL-STD 810G-H

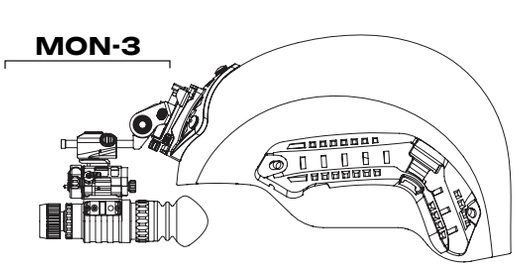

OPERATING TIME
≥50h

WEIGHT
<300g

DIMENSIONS (mm)
120 x 55 x 71

**Performance values are based on moonlight conditions; actual image intensifier tube performance may vary due to ambient illumination level and environmental factors.*
**A tolerance of ±10% applies to all parameters.*

BIN-3

BINOCULAR NIGHT VISION GOGGLES

P43 *(Green)*

P45 *(White)*

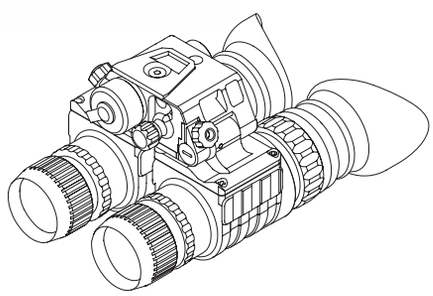

GENERAL FEATURES

The BIN-3 Series is an advanced night vision binocular system designed to deliver superior performance in low-light conditions. Its binocular configuration provides a wide field of view and enhanced depth perception, ensuring high effectiveness in surveillance, reconnaissance, and night operations.

Optimized for helmet mounting, the BIN-3 offers comfort and balanced use during extended missions. With military-grade optics and a robust, environmentally resistant housing, it delivers clear and stable imaging and reliable performance in demanding operational environments.

SPEC SUMMARY

Usage	Helmet
Field of View	40°
Eye Relief	25mm
Optical Magnification	1X
Image Color *(Optional)*	P43 *(Green)* / P45 *(White)*
Image Intensifier Tube	FOM *(Optional)* 1600 / 1800 / 2000 / 2200
Environmental Standards	MIL-STD 810G-H

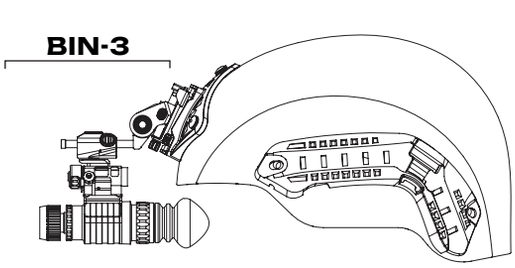

OPERATING TIME
≥25h

WEIGHT
<600g

DIMENSIONS (mm)
120 x 98 x 87

**Performance values are based on moonlight conditions; actual image intensifier tube performance may vary due to ambient illumination level and environmental factors.*
**A tolerance of ±10% applies to all parameters.*

QEYE 007 B-18X

FUSION BINOCULAR GOGGLES

Night Vision

Thermal

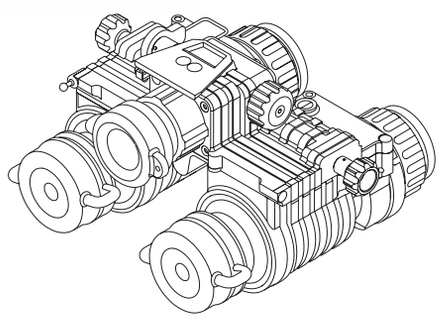

GENERAL FEATURES

Qeye 007-B18X is a compact binocular system designed for short and medium range surveillance and reconnaissance missions. Thanks to optical fusion technology, it combines dual image intensifier tubes with a thermal detector, integrating night vision image intensification and thermal imaging capabilities into a single system, delivering reliable performance in harsh conditions.

The system offers selectable night vision, thermal, or fused (combined) imaging modes, providing effective target detection and enhanced situational awareness in low light, fog, and smoke conditions. With its lightweight, rugged, and user-friendly design, the Qeye 007-B18X is suitable for special forces, reconnaissance units, and border security operations.

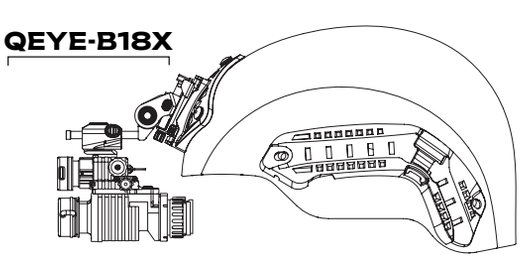

SPEC SUMMARY

Usage	Helmet
Detector Type	Uncooled µB
Field of View	24° x 19°
Eye Relief	25mm
Optical Magnification	1X
Imaging Modes	Thermal / Night Vision / Fusion
Image Intensifier Tube	FOM *(Optional)* 1600 / 1800 / 2000 / 2200
Environmental Standards	MIL-STD 810G-H

OPERATING TIME
≥8h

WEIGHT
<675g

DIMENSIONS (mm)
141 x 86 x 118

**Performance values are based on moonlight conditions; actual image intensifier tube performance may vary due to ambient illumination level and environmental factors.*
**A tolerance of ±10% applies to all parameters.*

ARMADILLO AS-10

INFRARED / VISIBLE FRIEND OR FOE IDENTIFICATION AND EMERGENCY STROBE

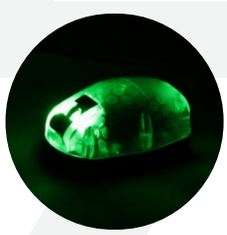

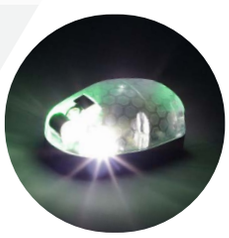

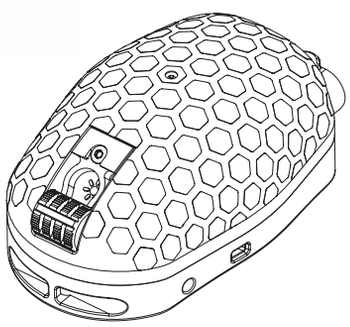

GENERAL FEATURES

ARMADILLO AS-10 Infrared / Visible Friend-or-Foe Identification and Emergency Strobe is a tactical marking device developed for the safe identification of personnel and units in military operations, operating in both visible and infrared spectra.

Fully compatible with night vision systems, it enables rapid and clear identification while maintaining operational concealment. Its rugged, mission-oriented housing provides high resistance to harsh environmental conditions. With steady and strobe modes, it offers flexible adaptation to different operational scenarios.

SPEC SUMMARY

Usage	Helmet
LEDs	Red / Green / White / IR
Operating Mods	Steady / Strobe *(Low Level / High Level)*
Brightness Adjustment	Low Level / High Level *(For All LED Options)*
Vibration Option	YES
Environmental Standards	MIL-STD 810G-H

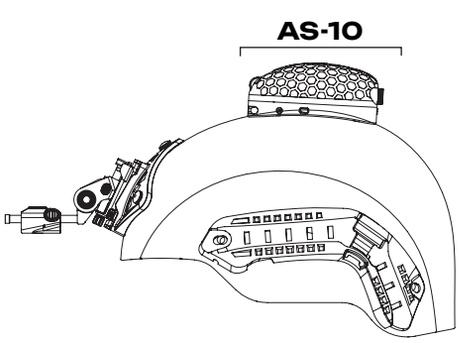

LED OPTIONS
4

WEIGHT
<55g

DIMENSIONS (mm)
80 x 40 x 55

*A tolerance of ±10% applies to all parameters.

ARMADILLO AS-30

INFRARED / VISIBLE FRIEND OR FOE IDENTIFICATION AND EMERGENCY STROBE

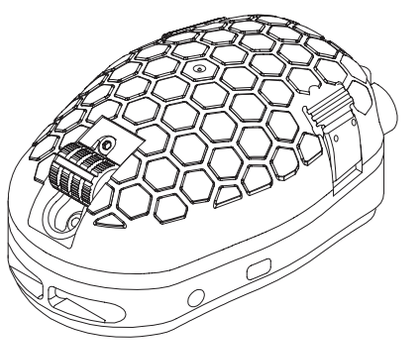

GENERAL FEATURES

ARMADILLO AS-30 Infrared / Visible Friend-or-Foe Identification and Emergency Strobe is a tactical marking device developed for the safe identification of personnel and units in military operations, operating in both the visible and infrared spectrum.

Its full compatibility with night vision systems enables rapid and clear identification while maintaining operational concealment. The rugged, mission-focused housing provides high resistance to harsh environmental conditions. With steady and strobe modes, it offers flexible adaptation to different mission scenarios. Through its synchronization and teaming capabilities, the system can be configured for simultaneous and coordinated group operation.

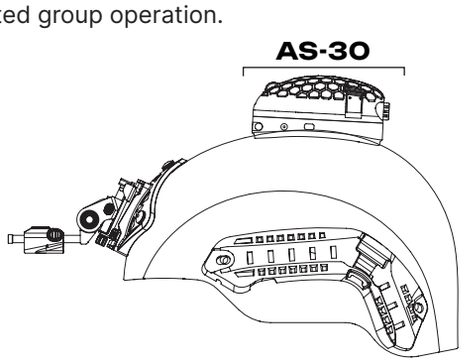

SPEC SUMMARY

Usage	Helmet
LEDs	Red / Green / White / IR / SWIR
Operating Mods	Steady / Strobe / Programmable
Brightness Adjustment	5 Level *(For All LED Options)*
Synchronization	Inter-Team Synchronization
Vibration Option	YES
Environmental Standards	MIL-STD 810G-H

LED OPTIONS
5

WEIGHT
<55g

DIMENSIONS (mm)
80 x 40 x 55

*A tolerance of ±10% applies to all parameters.

LASER BASED TARGETING & POINTING SYSTEMS

Laser Based Targeting & Pointing Systems are precision electro-optical solutions designed to support target illumination, identification, and designation in demanding operational environments. These systems provide accurate and controlled laser output, enhancing target visibility and coordination during both day and night operations.

Optimized for use in low-light and reduced-visibility conditions, laser illumination systems enable effective integration with night vision, thermal imaging, and other electro-optical platforms. Their precision and stability support improved targeting accuracy, situational awareness, and mission coordination across complex operational scenarios.

Engineered in compliance with military standards, laser illumination systems are built to withstand harsh environmental and operational conditions, including shock, vibration, and extreme temperatures. With their robust construction, compact design, and reliable performance, these systems ensure operational effectiveness and mission success for military and security forces.

PRODUCTS

76. LRF-3500 / LRF-6000
(Laser Range Finder)

77. MCAD-2
(Multi-Channel Laser Pointer & IR Illuminator)

78. MCAD-4R
(Multi-Channel Laser Pointer & Illuminator)

79. MPL
(Multi-Purpose IR Laser Pointer)

80. LZP-1
(Laser Zeroing Pointer)

81. HPEM-18S
(Special Systems)

LRF-3500 / LRF-6000

LASER RANGE FINDER

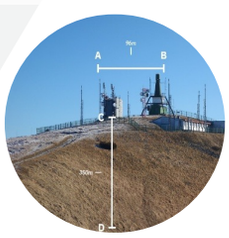

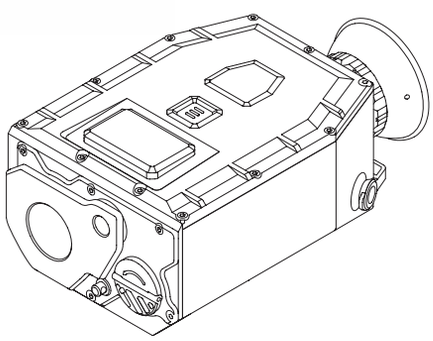

GENERAL FEATURES

The LRF family consists of compact and reliable laser rangefinders capable of providing high-precision distance measurement up to 6000 meters. Designed for target acquisition and range measurement, these systems deliver effective performance in both day and night operations.

With their lightweight and ergonomic design, the LRF-3500 and LRF-6000 offer ease of use in the field and high mobility, providing a practical solution for tactical and operational missions.

SPEC SUMMARY

	LRF-3500	LRF-6000
Usage	Handheld / Tripod	
Optical Magnification	7X	
Field of View	6°	
Diopter Adjutsment	-5D ~ +5D	
Measurement Range *(NATO Target)*	3500m	6000m
Environmental Standards	MIL-STD 810G-H	

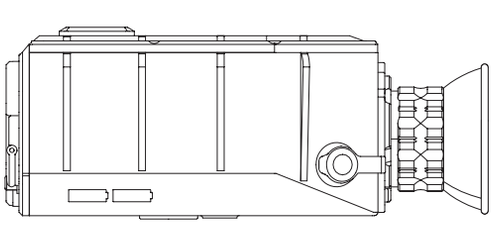

MAGNIFICATION
7X

WEIGHT
<460g

DIMENSIONS (mm)
146 x 98 x 58

*A tolerance of ±10% applies to all parameters.

MCAD-2

MULTI-CHANNEL LASER POINTER & IR ILLUMINATOR

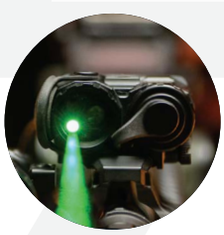

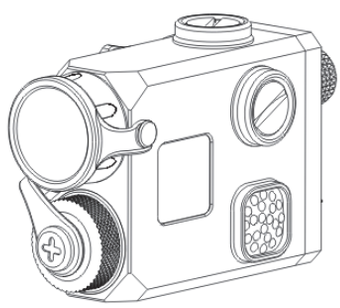

GENERAL FEATURES

MCAD-2 is a multi-channel aiming device that offers visible laser, infrared laser, and infrared illumination with both low and high power options.

Its mode selection switch allows users to toggle between high and low laser designation modes. A single adjustment turret (elevation and windage) enables synchronized alignment of all three lasers.

SPEC SUMMARY

Usage	Multi Channel Pointing Device
Wavelength *(IR Laser)*	830nm
Wavelength *(Visible Laser)*	Red: 650nm *(MCAD-2R)*
	Green: 520nm *(MCAD-2G)*
Output Power *(IR Laser)*	Low: 1mW
	High: 30mW
Output Power *(Visible Laser)*	Low: 0.7mW
	High: 50mW
Beam Divergence	<0.5mrad
Laser Pointer Class	3B

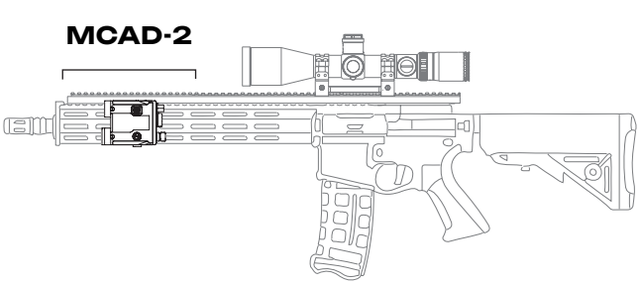

OPERATING TIME
≥6h

WEIGHT
<250g

DIMENSIONS (mm)
97 x 62 x 48

**A tolerance of ±10% applies to all parameters.*

MCAD-4R

MULTI-CHANNEL LASER POINTER & ILLUMINATOR

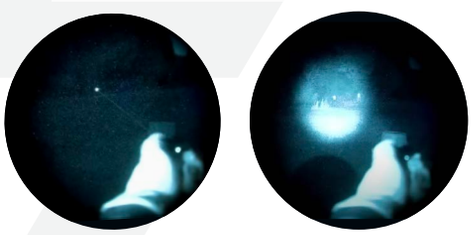

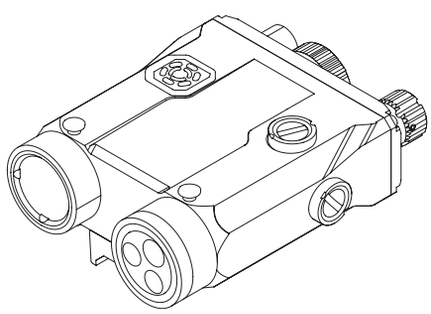

GENERAL FEATURES

MCAD-4R is a multi-channel aiming device that includes a visible laser, infrared laser, infrared illuminator, and flashlight, with both low and high power options. Its mode selection switch allows users to toggle between high and low laser designation modes.

A single adjustment screw (elevation and windage) enables synchronized alignment of the three laser sources. The zoom adjustment control located at the rear of the device provides ease of use. MCAD-4R is the only product featuring this capability.

SPEC SUMMARY

Usage	Multi Channel Pointing Device
Wavelength *(IR Laser)*	840nm
Wavelength *(Visible Laser)*	Red: 650nm
Beam Divergence *(IR / Visible Laser)*	<0.5mrad
Output Power *(IR Laser Illuminator)*	Low: 10mW
	High: 50mW
Luminous Flux of a Flashlight	450lm *(Max.)*
Laser Pointer Class	3B

MCAD-4R

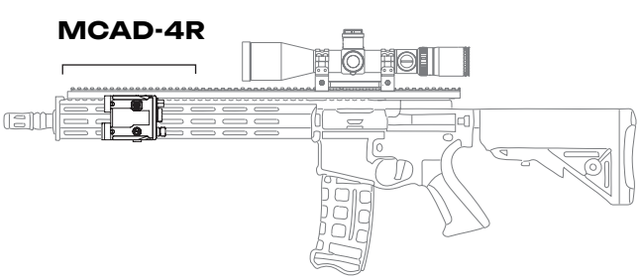

OPERATING TIME
≥6h

WEIGHT
<335g

DIMENSIONS (mm)
105 x 77 x 47

**A tolerance of ±10% applies to all parameters.*

MPL

MULTI-PURPOSE IR LASER POINTER

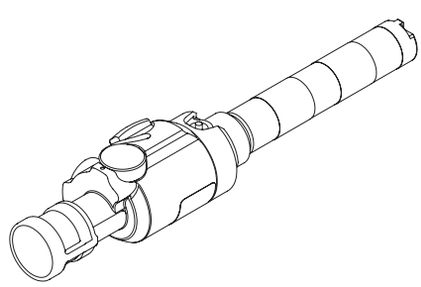

GENERAL FEATURES

MPL is a multi-purpose laser designator equipped with a high-power infrared laser for effective long-range target designation. It can be used as a handheld device or mounted on a weapon, providing flexibility for different operational requirements.

Thanks to its compact and rugged design, the MPL delivers reliable performance in the field during tactical applications.

SPEC SUMMARY

Usage	Laser Pointer
Wavelength	840nm
Output Power *(IR Laser)*	Low: 5mW
	High: 200mW
Beam Divergence	<0.5mrad
Range *(Night and Daylight Conditions)*	15km
Operating Time	High Power: 11h
	Low Power: 36h
Environmental Standards	MIL-STD 810G-H

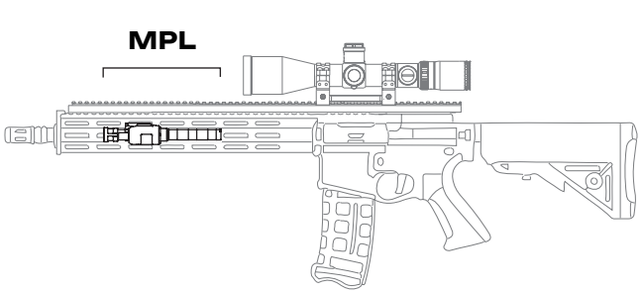

OPERATING TIME
≥11h

WEIGHT
<185g

DIMENSIONS (mm)
217 x 50 x 65

**A tolerance of ±10% applies to all parameters.*

LZP-1

LASER ZEROING POINTER

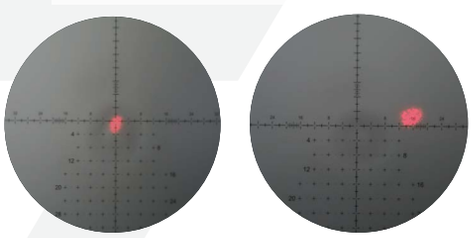

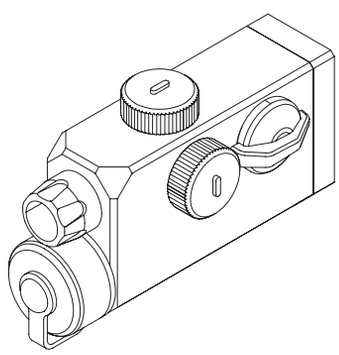

GENERAL FEATURES

LZP-1 is a practical and reliable laser boresighting device compatible with 5.56mm, 7.62mm, 8.59mm, and 12.7mm barrel calibers, allowing easy adaptation to various weapon platforms. It reduces the time and cost required for zeroing procedures, accelerating pre-mission preparation.

With its user-friendly design, the LZP-1 provides precise and repeatable zeroing, offering an efficient solution for both operational and training use.

SPEC SUMMARY

Usage	Laser Zeroing Pointer
Wavelength	635nm
Output Power	12mW
Operating Range	250m
Beam Divergence	<0.5mrad
Laser Class	3B
Environmental Standards	MIL-STD 810G-H

LZP

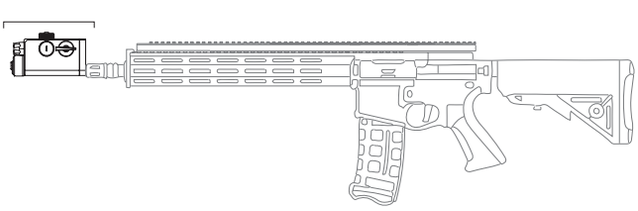

OPERATING TIME
≥10h

WEIGHT
<220g

DIMENSIONS (mm)
215 x 47 x 34

*A tolerance of ±10% applies to all parameters.

HPEM-18S

ELECTROMAGNETIC WAVE SYSTEM (EWS)

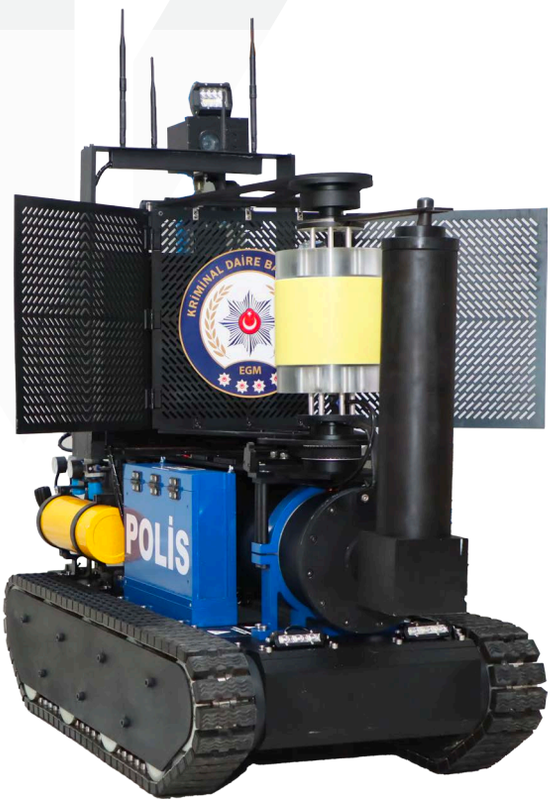

GENERAL FEATURES

The HPEM-18S system is a remotely operated robotic vehicle equipped with a High Power Electromagnetics (HPEM) generator and an Ultra-Wideband (UWB) antenna as its payload.

The system generates a very high-amplitude electric field and emits it in pulses using its wideband antenna. This emitted field neutralizes explosive threats triggered by explosive devices (IEDs) by remotely activating or disabling their triggering mechanisms.

Unlike jammers that are only effective against remotely controlled IEDs, the HPEM-18S system is effective against all types of trigger-based explosive threats.

The system consists of two main components: a remotely controlled robotic vehicle carrying the HPEM generator and UWB antenna payload, with remote operation performed via wired or wireless control.

The HPEM-18S is specially designed to be immune to the high-amplitude electromagnetic field it generates.

SPEC SUMMARY

Usage	Unmanned HPEM
Observation Camera	30X Motorized Zoom Camera
Marx Generator	15 Stage - 80 joule *(Triggered)*
Voltage	500kV
Dipole Antenna	Rotatable Reflector Resonant Dipole Antenna
Radiation Bandwidth	50MHz
Radiation Beam Width	90°
Built-in Jammer	Integrated ISM / Cellular Jammer

REMOTE CONTROL
300m

RADIATION BANDWIDTH
50Mhz

DIMENSIONS (mm)
1600 x 650 x 1500

*A tolerance of ±10% applies to all parameters.

TRANSVARO

Transvaro Elektron Aletleri Sanayi ve Ticaret A.Ş. is a subsidiary of UYAR HOLDING.

www.transvaro.com - info@transvaro.com